ANTREX Electronics

Electronic Components Sourcing Information

Product Reference Information

Part Number: P87C554SBAA,512

Manufacturer: NXP USA Inc.

Package: 68-LCC (J-Lead)

Availability: Please confirm with sales

Product Page:

https://antrexco.com/product/details/nxp-usa-inc/p87c554sbaa-512.html

Scan for product page

Request a Quote:

Submit RFQ for this part

Contact Information

Email: info@antrexco.com

WhatsApp: +86-186-8066-5326

Website: https://antrexco.com

Quality & Trust

New & Original Components

Supplier verification and packaging condition review

CoC / RoHS / REACH documents available on request

Secure sourcing support for OEM / EMS projects

Note:

This PDF includes an ANTREX product reference cover page.

The original manufacturer datasheet follows from the next page.

DATA SHEET

P87C554

80C51 8-bit microcontroller – 12 clock operation

16K/512 OTP/RAM 8 channel 10-bit A/D, I^2C, PWM, capture/compare, high I/O

Product data
Supersedes data of 1998 Aug 14

2002 Mar 25

Philips
Semiconductors

80C51 8-bit microcontroller – 12 clock operation
16K/512 OTP/RAM, 8 channel 10-bit A/D, I^{2}C, PWM, capture/compare, high I/O

P87C554

DESCRIPTION **1**
FEATURES **1**
ORDERING INFORMATION **2**
PART NUMBER DERIVATION **2**
BLOCK DIAGRAM **2**
PINNING INFORMATION **3**
Plastic Leaded Chip Carrier pin functions 3
LOGIC SYMBOL **3**
PIN DESCRIPTION **4**
SPECIAL FUNCTION REGISTERS **6**
OSCILLATOR CHARACTERISTICS **8**
RESET **8**
LOW POWER MODES **8**
Stop Clock Mode 8
Idle Mode 8
Power-Down Mode 8
POWER OFF FLAG **9**
Design Consideration 9
ONCEE Mode 9
Reduced EMI Mode 9
Expanded Data RAM Addressing 10
Dual DPTR 11
DPTR Instructions 11
Enhanced UART 13
Automatic Address Recognition 13
Timer T2 15
Timer T3, The Watchdog Timer 20
Serial I/O 21
Port 5 Operation 21
Pulse Width Modulated Outputs 21
Analog-to-Digital Converter 21
Power Reduction Modes 26
Interrupts 28
ABSOLUTE MAXIMUM RATINGS **61**
DEVICE SPECIFICATIONS **61**
DC ELECTRICAL CHARACTERISTICS **62**
AC ELECTRICAL CHARACTERISTICS **65**
EXPLANATION OF THE AC SYMBOLS **67**
EPROM CHARACTERISTICS **72**
Program Verification 72
Security Bits 72
REVISION HISTORY **74**

80C51 8-bit microcontroller – 12 clock operation 16K/512 OTP/RAM, 8 channel 10-bit A/D, I^{2}C, PWM, capture/compare, high I/O

P87C554

DESCRIPTION

The P87C554 Single-Chip 8-Bit Microcontroller is manufactured in an advanced CMOS process and is a derivative of the 80C51 microcontroller family. The 87C554 has the same instruction set as the 80C51.

The 87C554 contains a 16k × 8 non-volatile EPROM, a 512 × 8 read/write data memory, five 8-bit I/O ports, one 8-bit input port, two 16-bit timer/event counters (identical to the timers of the 80C51), an additional 16-bit timer coupled to capture and compare latches, a 15-source, four-priority-level, nested interrupt structure, an 8-input ADC, a dual DAC pulse width modulated interface, two serial interfaces (UART and I^{2}C-bus), a “watchdog” timer and on-chip oscillator and timing circuits. For systems that require extra capability, the P87C554 can be expanded using standard TTL compatible memories and logic.

In addition, the P87C554 has two software selectable modes of power reduction—idle mode and power-down mode. The idle mode freezes the CPU while allowing the RAM, timers, serial ports, and interrupt system to continue functioning. Optionally, the ADC can be operated in Idle mode. The power-down mode saves the RAM contents but freezes the oscillator, causing all other chip functions to be inoperative.

The device also functions as an arithmetic processor having facilities for both binary and BCD arithmetic plus bit-handling capabilities. The instruction set consists of over 100 instructions: 49 one-byte, 45 two-byte, and 17 three-byte. With a 16 MHz crystal, 58% of the instructions are executed in 0.75 µs and 40% in 1.5 µs. Multiply and divide instructions require 3 µs.

FEATURES

- 80C51 central processing unit
- 16k × 8 EPROM expandable externally to 64k bytes
- An additional 16-bit timer/counter coupled to four capture registers and three compare registers
- Two standard 16-bit timer/counters
- 512 × 8 RAM, expandable externally to 64k bytes
- Capable of producing eight synchronized, timed outputs
- A 10-bit ADC with eight multiplexed analog inputs
- Fast 8-bit ADC option
- Two 8-bit resolution, pulse width modulation outputs
- Five 8-bit I/O ports plus one 8-bit input port shared with analog inputs
- I^{2}C-bus serial I/O port with byte oriented master and slave functions
- On-chip watchdog timer
- Extended temperature ranges
- Full static operation – 0 to 16 MHz
- Operating voltage range: 2.7 V to 5.5 V (0 to 16 MHz) and 4.5 V to 5.5 V (16 to 33 MHz)
- Three security bits
- Encryption array – 64 bytes
- 4 level priority interrupt
- 15 interrupt sources
- Full-duplex enhanced UART
  - Framing error detection
  - Automatic address recognition
- Power control modes
  - Clock can be stopped and resumed
  - Idle mode
  - Power down mode
- Second DPTR register
- ALE inhibit for EMI reduction
- Programmable I/O pins
- Wake-up from power-down by external interrupts
- Software reset
- Power-on detect reset
- ADC charge pump disable
- ONCE mode
- ADC active in Idle mode

ORDERING INFORMATION

OTP/EPROM	TEMPERATURE °C AND PACKAGE	FREQ. (MHz)	DRAWING NUMBER
P87C554SBAA	0 to +70, Plastic Leaded Chip Carrier	16	SOT188–3
P87C554SFAA	–40 to +85, Plastic Leaded Chip Carrier	16	SOT188–3

PART NUMBER DERIVATION

DEVICE NUMBER (P87C554)	OPERATING FREQUENCY MAX (S)	TEMPERATURE RANGE (B)	PACKAGE (AA)
P87C554 OTP	S = 16 MHz	B= 0 °C to 70 °C F = –40 °C to +85 °C	AA = PLCC

BLOCK DIAGRAM

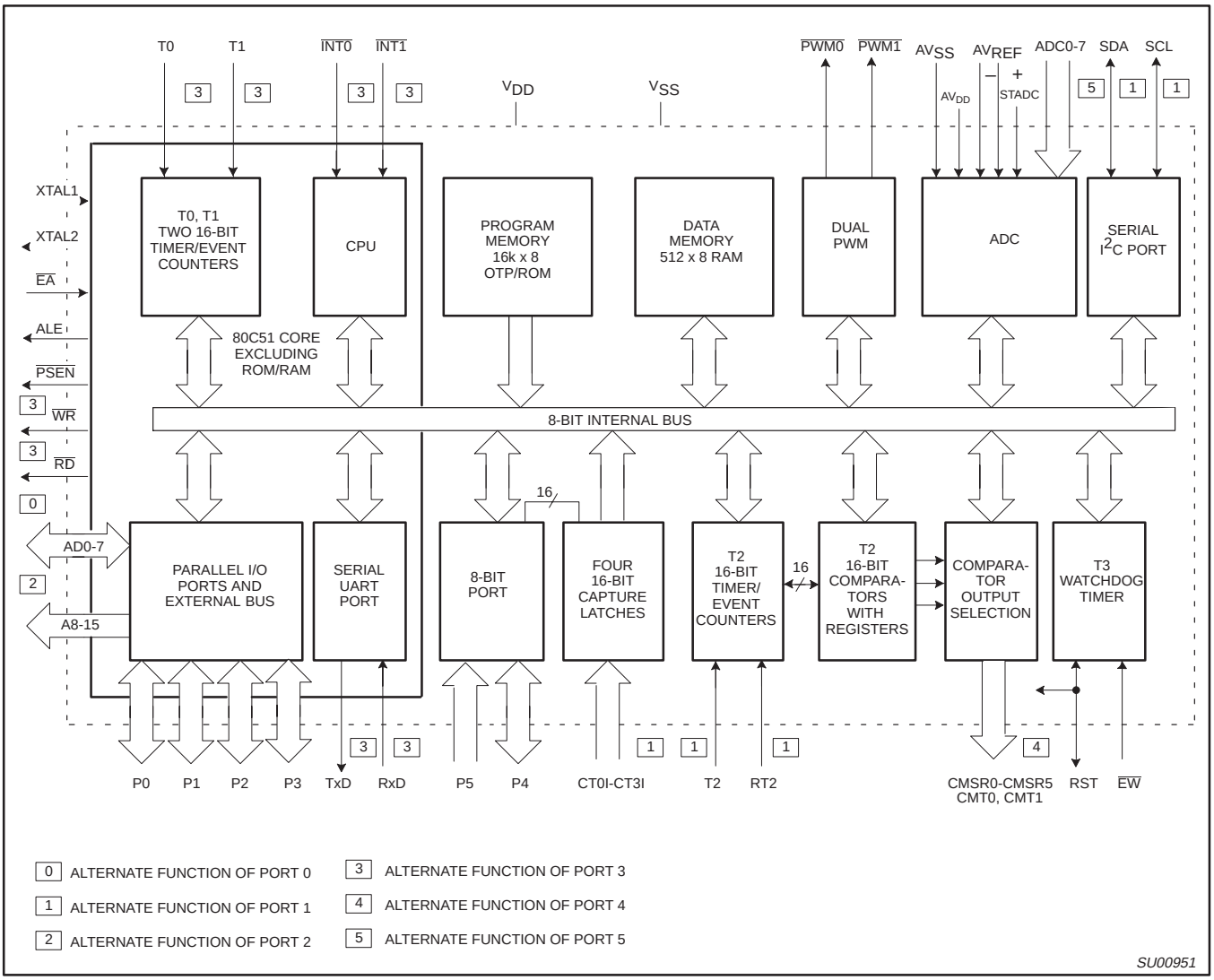

PINNING INFORMATION

Plastic Leaded Chip Carrier pin functions

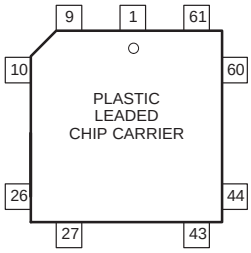

Pin	Function	Pin	Function	Pin	Function
1	P5.0/ADC0	24	P3.0/RxD	47	$\overline{PSEN}$
2	V_{DD}	25	P3.1/TxD	48	ALE/$\overline{PROG}$
3	STADC	26	P3.2/$\overline{INT0}$	49	$\overline{EA}$/V_{PP}
4	$\overline{PWM0}$	27	P3.3/$\overline{INT1}$	50	P0.7/AD7
5	$\overline{PWM1}$	28	P3.4/T0	51	P0.6/AD6
6	$\overline{EW}$	29	P3.5/T1	52	P0.5/AD5
7	P4.0/CMSR0	30	P3.6/$\overline{WR}$	53	P0.4/AD4
8	P4.1/CMSR1	31	P3.7/$\overline{RD}$	54	P0.3/AD3
9	P4.2/CMSR2	32	NC	55	P0.2/AD2
10	P4.3/CMSR3	33	NC	56	P0.1/AD1
11	P4.4/CMSR4	34	XTAL2	57	P0.0/AD0
12	P4.5/CMSR5	35	XTAL1	58	AVref–
13	P4.6/CMT0	36	V_{SS}	59	AVref+
14	P4.7/CMT1	37	V_{SS}	60	AV_{SS}
15	RST	38	NC	61	AV_{DD}
16	P1.0/CT0I	39	P2.0/A08	62	P5.7/ADC7
17	P1.1/CT1I	40	P2.1/A09	63	P5.6/ADC6
18	P1.2/CT2I	41	P2.2/A10	64	P5.5/ADC5
19	P1.3/CT3I	42	P2.3/A11	65	P5.4/ADC4
20	P1.4/T2	43	P2.4/A12	66	P5.3/ADC3
21	P1.5/RT2	44	P2.5/A13	67	P5.2/ADC2
22	P1.6/SCL	45	P2.6/A14	68	P5.1/ADC1
23	P1.7/SDA	46	P2.7/A15		

SU00208

LOGIC SYMBOL

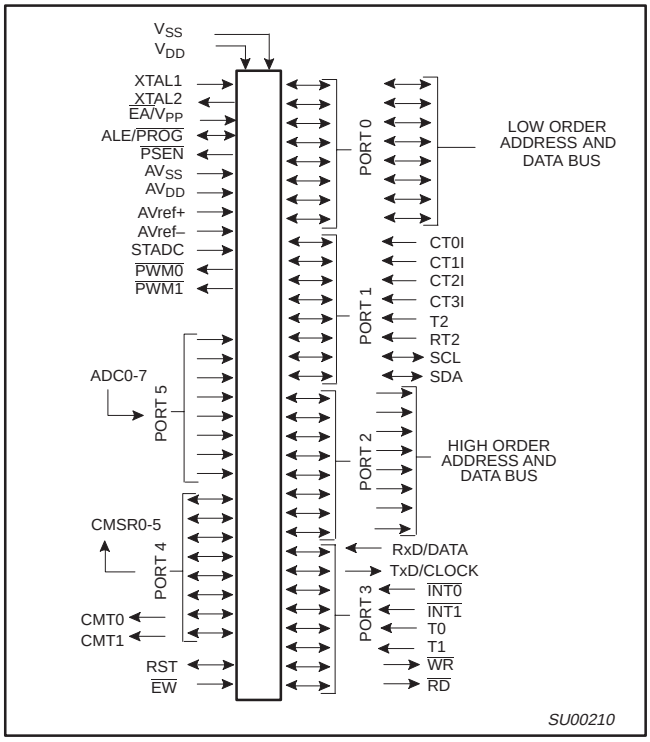

PIN DESCRIPTION

Table 1. Pin description

MNEMONIC	PIN NO.	TYPE	NAME AND FUNCTION
V_{DD}	2	I	**Digital Power Supply:** Positive voltage power supply pin during normal operation, idle and power-down mode.
STADC	3	I	**Start ADC Operation:** Input starting analog to digital conversion (ADC operation can also be started by software).
$\overline{PWM0}$	4	O	**Pulse Width Modulation:** Output 0.
$\overline{PWM1}$	5	O	**Pulse Width Modulation:** Output 1.
$\overline{EW}$	6	I	**Enable Watchdog Timer:** Enable for T3 watchdog timer and disable power-down mode.
P0.0-P0.7	57-50	I/O	**Port 0:** Port 0 is an 8-bit open-drain bidirectional I/O port. Port 0 pins that have 1s written to them float and can be used as high-impedance inputs. Port 0 is also the multiplexed low-order address and data bus during accesses to external program and data memory. In this application it uses strong internal pull-ups when emitting 1s. Port 0 is also used to input the code byte during programming and to output the code byte during verification.
P1.0-P1.7	16-23	I/O	**Port 1:** 8-bit I/O port. Alternate functions include:
	16-21	I/O	**(P1.0-P1.5):** Programmable I/O port pins.
	22-23	I/O	**(P1.6, P1.7):** Open drain port pins.
	16-19	I	**CT0I-CT3I (P1.0-P1.3):** Capture timer input signals for timer T2.
	20	I	**T2 (P1.4):** T2 event input.
	21	I	**RT2 (P1.5):** T2 timer reset signal. Rising edge triggered.
	22	I/O	**SCL (P1.6):** Serial port clock line I^{2}C-bus.
	23	I/O	**SDA (P1.7):** Serial port data line I^{2}C-bus.
			Port 1 has four modes selected on a per bit basis by writing to the P1M1 and P1M2 registers as follows: **P1M1.x** **P1M2.x** **Mode Description** 0 0 Pseudo–bidirectional (standard c51 configuration; default) 0 1 Push-Pull 1 0 High impedance 1 1 Open drain Port 1 is also used to input the lower order address byte during EPROM programming and verification. A0 is on P1.0, etc.
P2.0-P2.7	39-46	I/O	**Port 2:** 8-bit programmable I/O port. Alternate function: High-order address byte for external memory (A08-A15). Port 2 is also used to input the upper order address during EPROM programming and verification. A8 is on P2.0, A9 on P2.1, through A13 on P2.5. Port 2 has four output modes selected on a per bit basis by writing to the P2M1 and P2M2 registers as follows: **P2M1.x** **P2M2.x** **Mode Description** 0 0 Pseudo–bidirectional (standard c51 configuration; default) 0 1 Push-Pull 1 0 High impedance 1 1 Open drain
P3.0-P3.7	24-31	I/O	**Port 3:** 8-bit programmable I/O port. Alternate functions include:
	24		**RxD(P3.0):** Serial input port.
	25		**TxD (P3.1):** Serial output port.
	26		**$\overline{INT0}$ (P3.2):** External interrupt.
	27		**$\overline{INT1}$ (P3.3):** External interrupt.
	28		**T0 (P3.4):** Timer 0 external input.
	29		**T1 (P3.5):** Timer 1 external input.
	30		**$\overline{WR}$ (P3.6):** External data memory write strobe.
	31		**$\overline{RD}$ (P3.7):** External data memory read strobe.
			Port 3 has four modes selected on a per bit basis by writing to the P3M1 and P3M2 registers as follows: **P3M1.x** **P3M2.x** **Mode Description** 0 0 Pseudo–bidirectional (standard c51 configuration; default) 0 1 Push–Pull 1 0 High impedance 1 1 Open drain

PIN DESCRIPTION (Continued)

MNEMONIC	PIN NO.	TYPE	NAME AND FUNCTION
P4.0-P4.7	7-14	I/O	**Port 4:** 8-bit programmable I/O port. Alternate functions include:
	7-12	O	**CMSR0-CMSR5 (P4.0-P4.5):** Timer T2 compare and set/reset outputs on a match with timer T2.
	13, 14	O	**CMT0, CMT1 (P4.6, P4.7):** Timer T2 compare and toggle outputs on a match with timer T2.
			Port 4 has four modes selected on a per bit basis by writing to the P4M1 and P4M2 registers as follows: **P4M1.x** **P4M2.x** **Mode Description** 0 0 Pseudo-bidirectional (standard c51 configuration; default) 0 1 Push-Pull 1 0 High impedance 1 1 Open drain
P5.0-P5.7	68-62, 1	I	**Port 5:** 8-bit input port. **ADC0-ADC7 (P5.0-P5.7):** Alternate function: Eight input channels to the ADC.
RST	15	I/O	**Reset:** Input to reset the 87C554. It also provides a reset pulse as output when timer T3 overflows.
XTAL1	35	I	**Crystal Input 1:** Input to the inverting amplifier that forms the oscillator, and input to the internal clock generator. Receives the external clock signal when an external oscillator is used.
XTAL2	34	O	**Crystal Input 2:** Output of the inverting amplifier that forms the oscillator. Left open-circuit when an external clock is used.
V_{SS}	36, 37	I	**Digital ground.**
$\overline{PSEN}$	47	O	**Program Store Enable:** Active-low read strobe to external program memory.
ALE/$\overline{PROG}$	48	O	**Address Latch Enable:** Latches the low byte of the address during accesses to external memory. It is activated every six oscillator periods. During an external data memory access, one ALE pulse is skipped. ALE can drive up to eight LS TTL inputs and handles CMOS inputs without an external pull-up. This pin is also the program pulse input ($\overline{PROG}$) during EPROM programming.
$\overline{EA}$/V_{PP}	49	I	**External Access:** When $\overline{EA}$ is held at TTL level high, the CPU executes out of the internal program ROM provided the program counter is less than 16,384. When $\overline{EA}$ is held at TTL low level, the CPU executes out of external program memory. $\overline{EA}$ is not allowed to float. This pin also receives the 12.75 V programming supply voltage (V_{PP}) during EPROM programming.
AV_{REF-}	58	I	**Analog to Digital Conversion Reference Resistor:** Low-end.
AV_{REF+}	59	I	**Analog to Digital Conversion Reference Resistor:** High-end.
AV_{SS}	60	I	**Analog Ground**
AV_{DD}	61	I	**Analog Power Supply**

NOTE:
1. To avoid “latch-up” effect at power-on, the voltage on any pin at any time must not be higher or lower than V_{DD} + 0.5 V or V_{SS} – 0.5 V, respectively.

SPECIAL FUNCTION REGISTERS

Table 1. Special Function Registers

SYMBOL	DESCRIPTION	DIRECT ADDRESS	BIT ADDRESS, SYMBOL, OR ALTERNATIVE PORT FUNCTION MSB							LSB	RESET VALUE
ACC*	Accumulator	E0H	E7	E6	E5	E4	E3	E2	E1	E0	00H
ADCH#	A/D converter high	C6H									xxxxxxxxB
ADCON#	A/D control	C5H	ADC.1	ADC.0	ADEX	ADCI	ADCS	AADR2	AADR1	AADR0	xx000000B
AUXR	Auxiliary	8EH	–	–	–	–	–	LVADC	EXTRAM	A0	xxxxx110B
AUXR1	Auxiliary	A2H	ADC8	AIDL	SRST	GF2	WUPD	O	–	DPS	000000x0B
B*	B register	F0H	F7	F6	F5	F4	F3	F2	F1	F0	00H
CTCON#	Capture control	EBH	CTN3	CTP3	CTN2	CTP2	CTN1	CTP1	CTN0	CTP0	00H
CTH3#	Capture high 3	CFH									xxxxxxxxB
CTH2#	Capture high 2	CEH									xxxxxxxxB
CTH1#	Capture high 1	CDH									xxxxxxxxB
CTH0#	Capture high 0	CCH									xxxxxxxxB
CMH2#	Compare high 2	CBH									00H
CMH1#	Compare high 1	CAH									00H
CMH0#	Compare high 0	C9H									00H
CTL3#	Capture low 3	AFH									xxxxxxxxB
CTL2#	Capture low 2	AEH									xxxxxxxxB
CTL1#	Capture low 1	ADH									xxxxxxxxB
CTL0#	Capture low 0	ACH									xxxxxxxxB
CML2#	Compare low 2	ABH									00H
CML1#	Compare low 1	AAH									00H
CML0#	Compare low 0	A9H									00H
DPTR:	Data pointer (2 bytes):										
DPH	Data pointer high	83H									00H
DPL	Data pointer low	82H									00H
			AF	AE	AD	AC	AB	AA	A9	A8	
IEN0*#	Interrupt enable 0	A8H	EA	EAD	ES1	ES0	ET1	EX1	ET0	EX0	00H
			EF	EE	ED	EC	EB	EA	E9	E8	
IEN1*#	Interrupt enable 1	E8H	ET2	ECM2	ECM1	ECM0	ECT3	ECT2	ECT1	ECT0	00H
			BF	BE	BD	BC	BB	BA	B9	B8	
IP0*#	Interrupt priority 0	B8H	–	PAD	PS1	PS0	PT1	PX1	PT0	PX0	x0000000B
			FF	FE	FD	FC	FB	FA	F9	F8	
IP0H	Interrupt priority 0 high	B7H	–	PADH	PS1H	PS0H	PT1H	PX1H	PT0H	PX0H	x0000000B
IP1*#	Interrupt priority1	F8H	PT2	PCM2	PCM1	PCM0	PCT3	PCT2	PCT1	PCT0	00H
IP1H	Interrupt priority 1 high	F7H	PT2H	PCM2H	PCM1H	PCM0H	PCT3H	PCT2H	PCT1H	PCT0H	00H
P5#	Port 5	C4H	ADC7	ADC6	ADC5	ADC4	ADC3	ADC2	ADC1	ADC0	xxxxxxxxB
			C7	C6	C5	C4	C3	C2	C1	C0	
P4#*	Port 4	C0H	CMT1	CMT0	CMSR5	CMSR4	CMSR3	CMSR2	CMSR1	CMSR0	FFH
			B7	B6	B5	B4	B3	B2	B1	B0	
P3*	Port 3	B0H	$\overline{RD}$	$\overline{WR}$	T1	T0	$\overline{INT1}$	$\overline{INT0}$	TXD	RXD	FFH
			A7	A6	A5	A4	A3	A2	A1	A0	
P2*	Port 2	A0H	A15	A14	A13	A12	A11	A10	A9	A8	FFH
			97	96	95	94	93	92	91	90	
P1*	Port 1	90H	SDA	SCL	RT2	T2	CT3I	CT2I	CT1I	CT0I	FFH
			87	86	85	84	83	82	81	80	
P0*	Port 0	80H	AD7	AD6	AD5	AD4	AD3	AD2	AD1	AD0	FFH

SYMBOL	DESCRIPTION	DIRECT ADDRESS	BIT ADDRESS, SYMBOL, OR ALTERNATIVE PORT FUNCTION MSB							LSB	RESET VALUE
P1M1	Port 1 output mode 1	92H									xx000000B
P1M2	Port 1 output mode 2	93H									xx000000B
P2M1	Port 2 output mode 1	94H									00H
P2M2	Port 2 output mode 2	95H									00H
P3M1	Port 3 output mode 1	9AH									00H
P3M2	Port 3 output mode 2	9BH									00H
P4M1	Port 4 output mode 1	9CH									00H
P4M2	Port 4 output mode 2	9DH									00H
PCON	Power control	87H	SMOD1	SMOD0	POF	WLE	GF1	GFO	PD	IDL	00x00000B
PSW	Program status word	D0H	CY	AC	FO	RS1	RS0	OV	F1	P	00H
PWMP#	PWM prescaler	FEH									00H
PWM1#	PWM register 1	FDH									00H
PWM0#	PWM register 0	FCH									00H
RTE#	Reset/toggle enable	EFH	TP47	TP46	RP45	RP44	RP43	RP42	RP41	RP40	00H
S0ADDR	Serial 0 slave address	F9H									00H
S0ADEN	Slave address mask	B9H									00H
S0BUF	Serial 0 data buffer	99H									xxxxxxxxB
			9F	9E	9D	9C	9B	9A	99	98	
S0CON*	Serial 0 control	98H	SM0/FE	SM1	SM2	REN	TB8	RB8	TI	RI	00H
S1ADR#	Serial 1 address	DBH	SLAVE ADDRESS							GC	00H
SIDAT#	Serial 1 data	DAH									00H
S1STA#	Serial 1 status	D9H	SC4	SC3	SC2	SC1	SC0	0	0	0	F8H
			DF	DE	DD	DC	DB	DA	D9	D8	
SICON#*	Serial 1 control	D8H	CR2	ENS1	STA	ST0	SI	AA	CR1	CR0	00H
SP	Stack pointer	81H									07H
STE#	Set enable	EEH	TG47	TG46	SP45	SP44	SP43	SP42	SP41	SP40	C0H
TH1	Timer high 1	8DH									00H
TH0	Timer high 0	8CH									00H
TL1	Timer low 1	8BH									00H
TL0	Timer low 0	8AH									00H
TMH2#	Timer high 2	EDH									00H
TML2#	Timer low 2	ECH									00H
TMOD	Timer mode	89H	GATE	C/$\overline{T}$	M1	M0	GATE	C/$\overline{T}$	M1	M0	00H
			8F	8E	8D	8C	8B	8A	89	88	
TCON*	Timer control	88H	TF1	TR1	TF0	TR0	IE1	IT1	IE0	IT0	00H
TM2CON#	Timer 2 control	EAH	T2IS1	T2IS0	T2ER	T2B0	T2P1	T2P0	T2MS1	T2MS0	00H
			CF	CE	CD	CC	CB	CA	C9	C8	
TM2IR#*	Timer 2 int flag reg	C8H	T20V	CMI2	CMI1	CMI0	CTI3	CTI2	CTI1	CTI0	00H
T3#	Timer 3	FFH									00H

* SFRs are bit addressable.
\# SFRs are modified from or added to the 80C51 SFRs.

OSCILLATOR CHARACTERISTICS

XTAL1 and XTAL2 are the input and output, respectively, of an inverting amplifier. The pins can be configured for use as an on-chip oscillator, as shown in the logic symbol.

To drive the device from an external clock source, XTAL1 should be driven while XTAL2 is left unconnected. There are no requirements on the duty cycle of the external clock signal, because the input to the internal clock circuitry is through a divide-by-two flip-flop. However, minimum and maximum high and low times specified in the data sheet must be observed.

RESET

A reset is accomplished by either (1) externally holding the RST pin high for at least two machine cycles (24 oscillator periods) or (2) internally by an on-chip power-on detect (POD) circuit which detects V_{CC} ramping up from 0 V.

To insure a good external power-on reset, the RST pin must be high long enough for the oscillator to start up (normally a few milliseconds) plus two machine cycles. The voltage on V_{DD} and the RST pin must come up at the same time for a proper startup.

For a successful internal power-on reset, the V_{CC} voltage must ramp up from 0 V smoothly at a ramp rate greater than 5 V/100 ms.

The RST line can also be pulled HIGH internally by a pull-up transistor activated by the watchdog timer T3. The length of the output pulse from T3 is 3 machine cycles. A pulse of such short duration is necessary in order to recover from a processor or system fault as fast as possible.

Note that the short reset pulse from Timer T3 cannot discharge the power-on reset capacitor (see Figure 2). Consequently, when the watchdog timer is also used to set external devices, this capacitor arrangement should not be connected to the RST pin, and a different circuit should be used to perform the power-on reset operation. A timer T3 overflow, if enabled, will force a reset condition to the P87C554 by an internal connection, independent of the level of the RST pin.

A reset may be performed in software by setting the software reset bit, SRST (AUXR1.5).

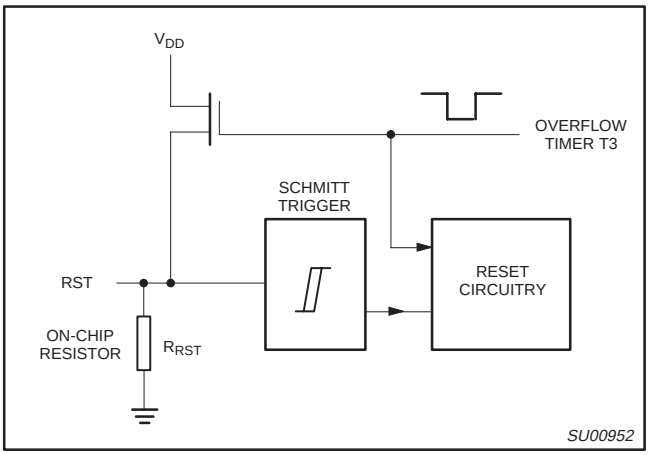

Figure 1. On-Chip Reset Configuration

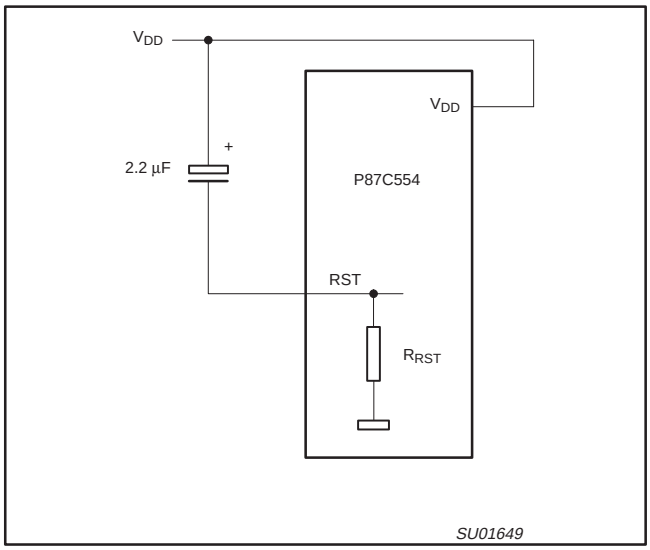

Figure 2. Power-On Reset

LOW POWER MODES

Stop Clock Mode

The static design enables the clock speed to be reduced down to 0 MHz (stopped). When the oscillator is stopped, the RAM and Special Function Registers retain their values. This mode allows step-by-step utilization and permits reduced system power consumption by lowering the clock frequency down to any value. For lowest power consumption the Power Down mode is suggested.

Idle Mode

In the idle mode (see Table 2), the CPU puts itself to sleep while some of the on-chip peripherals stay active. The instruction to invoke the idle mode is the last instruction executed in the normal operating mode before the idle mode is activated. The CPU contents, the on-chip RAM, and all of the special function registers remain intact during this mode. The idle mode can be terminated either by any enabled interrupt (at which time the process is picked up at the interrupt service routine and continued), or by a hardware reset which starts the processor in the same manner as a power-on reset.

Power-Down Mode

To save even more power, a Power Down mode (see Table 2) can be invoked by software. In this mode, the oscillator is stopped and the instruction that invoked Power Down is the last instruction executed. The on-chip RAM and Special Function Registers retain their values down to 2.0 V and care must be taken to return V_{CC} to the minimum specified operating voltages before the Power Down Mode is terminated.

Either a hardware reset or external interrupt can be used to exit from Power Down. The Wake-up from Power-down bit, WUPD (AUXR1.3) must be set in order for an external interrupt to cause a wake-up from power-down. Reset redefines all the SFRs but does not change the on-chip RAM. An external interrupt allows both the SFRs and the on-chip RAM to retain their values.

To properly terminate Power Down the reset or external interrupt should not be executed before V_{CC} is restored to its normal operating level and must be held active long enough for the oscillator to restart and stabilize (normally less than 10 ms).

Table 2. External Pin Status During Idle and Power-Down Modes

MODE	PROGRAM MEMORY	ALE	$\overline{PSEN}$	PORT 0	PORT 1	PORT 2	PORT 3	PORT 4	PWM0/ PWM1
Idle	Internal	1	1	Data	Data	Data	Data	Data	High
Idle	External	1	1	Float	Data	Address	Data	Data	High
Power-down	Internal	0	0	Data	Data	Data	Data	Data	High
Power-down	External	0	0	Float	Data	Data	Data	Data	High

With an external interrupt, INT0 and INT1 must be enabled and configured as level-sensitive. Holding the pin low restarts the oscillator but bringing the pin back high completes the exit. Once the interrupt is serviced, the next instruction to be executed after RETI will be the one following the instruction that put the device into Power Down.

POWER OFF FLAG

The Power Off Flag (POF) is set by on-chip circuitry when the V_{CC} level on the P87C554 rises from 0 to 5 V. The POF bit can be set or cleared by software allowing a user to determine if the reset is the result of a power-on or a warm start after powerdown. The V_{CC} level must remain above 3 V for the POF to remain unaffected by the V_{CC} level.

Design Consideration

- When the idle mode is terminated by a hardware reset, the device normally resumes program execution, from where it left off, up to two machine cycles before the internal reset algorithm takes control. On-chip hardware inhibits access to internal RAM in this event, but access to the port pins is not inhibited. To eliminate the possibility of an unexpected write when Idle is terminated by reset, the instruction following the one that invokes Idle should not be one that writes to a port pin or to external memory.

ONCE™ Mode

The ONCE ("On-Circuit Emulation") Mode facilitates testing and debugging of systems without the device having to be removed from the circuit. The ONCE Mode is invoked by:

1. Pull ALE low while the device is in reset and $\overline{PSEN}$ is high;
2. Hold ALE low as RST is deactivated.

While the device is in ONCE Mode, the Port 0 pins go into a float state, and the other port pins and ALE and $\overline{PSEN}$ are weakly pulled high. The oscillator circuit remains active. While the device is in this mode, an emulator or test CPU can be used to drive the circuit. Normal operation is restored when a normal reset is applied.

Reduced EMI Mode

The ALE-Off bit, AO (AUXR.0) can be set to disable the ALE output. It will automatically become active when required for external memory accesses and resume to the OFF state after completing the external memory access.

	7	6	5	4	3	2	1	0
PCON (87H)	SMOD1	SMOD0	POF	WLE	GF1	GF0	PD	IDL
	(MSB)							(LSB)

BIT	SYMBOL	FUNCTION
PCON.7	SMOD1	Double Baud rate bit. When set to logic 1, the baud rate is doubled when the serial port SIO0 is being used in modes 1, 2, or 3.
PCON.6	SMOD0	Selects SM0/FE for SCON.7 bit.
PCON.5	POF	Power Off Flag
PCON.4	WLE	Watchdog Load Enable. This flag must be set by software prior to loading timer T3 (watchdog timer). It is cleared when timer T3 is loaded.
PCON.3	GF1	General-purpose flag bit.
PCON.2	GF0	General-purpose flag bit.
PCON.1	PD	Power-down bit. Setting this bit activates the power-down mode. It can only be set if input $\overline{EW}$ is high.
PCON.0	IDL	Idle mode bit. Setting this bit activates the Idle mode.

If logic 1s are written to PD and IDL at the same time, PD takes precedence. The reset value of PCON is (00X00000).

SU00954

Figure 3. Power Control Register (PCON)

Expanded Data RAM Addressing

The P87C554 has internal data memory that is mapped into four separate segments: the lower 128 bytes of RAM, upper 128 bytes of RAM, 128 bytes Special Function Register (SFR), and 256 bytes expanded RAM (EXTRAM).

The four segments are:

1. The Lower 128 bytes of RAM (addresses 00H to 7FH) are directly and indirectly addressable.
2. The Upper 128 bytes of RAM (addresses 80H to FFH) are indirectly addressable only.
3. The Special Function Registers, SFRs, (addresses 80H to FFH) are directly addressable only.
4. The 256-bytes expanded RAM (ERAM, 00H – FFH) are indirectly accessed by move external instruction, MOVX, and with the EXTRAM bit cleared, see Figure 4.

The Lower 128 bytes can be accessed by either direct or indirect addressing. The Upper 128 bytes can be accessed by indirect addressing only. The Upper 128 bytes occupy the same address space as the SFR. That means they have the same address, but are physically separate from SFR space.

When an instruction accesses an internal location above address 7FH, the CPU knows whether the access is to the upper 128 bytes of data RAM or to SFR space by the addressing mode used in the instruction. Instructions that use direct addressing access SFR space. For example:

MOV 0A0H,#data

accesses the SFR at location 0A0H (which is P2). Instructions that use indirect addressing access the Upper 128 bytes of data RAM.

For example:

MOV @R0,#data

where R0 contains 0A0H, accesses the data byte at address 0A0H, rather than P2 (whose address is 0A0H).
The ERAM can be accessed by indirect addressing, with EXTRAM bit cleared and MOVX instructions. This part of memory is physically located on-chip, logically occupies the first 256-bytes of external data memory.

With EXTRAM = 0, the EXTRAM is indirectly addressed, using the MOVX instruction in combination with any of the registers R0, R1 of the selected bank or DPTR. An access to ERAM will not affect ports P0, P3.6 (WR#) and P3.7 (RD#). P2 SFR is output during expanded RAM addressing. For example, with EXTRAM = 0,

MOVX @R0,#data

where R0 contains 0A0H, accesses the ERAM at address 0A0H rather than external memory. An access to external data memory locations higher than FFH (i.e., 0100H to FFFFH) will be performed with the MOVX DPTR instructions in the same way as in the standard 80C51, so with P0 and P2 as data/address bus, and P3.6 and P3.7 as write and read timing signals. Refer to Figure 5.

With EXTRAM = 1, MOVX @Ri and MOVX @DPTR will be similar to the standard 80C51. MOVX @ Ri will provide an 8-bit address multiplexed with data on Port 0 and any output port pins can be used to output higher order address bits. This is to provide the external paging capability. MOVX @DPTR will generate a 16-bit address. Port 2 outputs the high-order eight address bits (the contents of DPH) while Port 0 multiplexes the low-order eight address bits (DPL) with data. MOVX @Ri and MOVX @DPTR will generate either read or write signals on P3.6 (#WR) and P3.7 (#RD).

The stack pointer (SP) may be located anywhere in the 256 bytes RAM (lower and upper RAM) internal data memory. The stack may not be located in the ERAM address space.

AUXR Address = 8EH Reset Value = xxxx x110B

Not Bit Addressable

	—	—	—	—	—	**LVADC**	**EXTRAM**	**AO**
Bit:	7	6	5	4	3	2	1	0

Symbol	**Function**
AO	Disable/Enable ALE
	AO — **Operating Mode** 0 — ALE is emitted at a constant rate of 1/6 the oscillator frequency. 1 — ALE is active only during a MOVX or MOVC instruction.
EXTRAM	Internal/External RAM (00H – FFH) access using MOVX @Ri/@DPTR
	EXTRAM — **Operating Mode** 0 — Internal ERAM (00H–FFH) access using MOVX @Ri/@DPTR 1 — External data memory access.
LVADC	Enable A/D low voltage operation
	LVADC — **Operating Mode** 0 — Turns off A/D charge pump. 1 — Turns on A/D charge pump. Required for operation below 4V.
—	Not implemented, reserved for future use*.

NOTE:
*User software should not write 1s to reserved bits. These bits may be used in future 8051 family products to invoke new features. In that case, the reset or inactive value of the new bit will be 0, and its active value will be 1. The value read from a reserved bit is indeterminate.

SU00979A

Figure 4. AUXR: Auxiliary Register

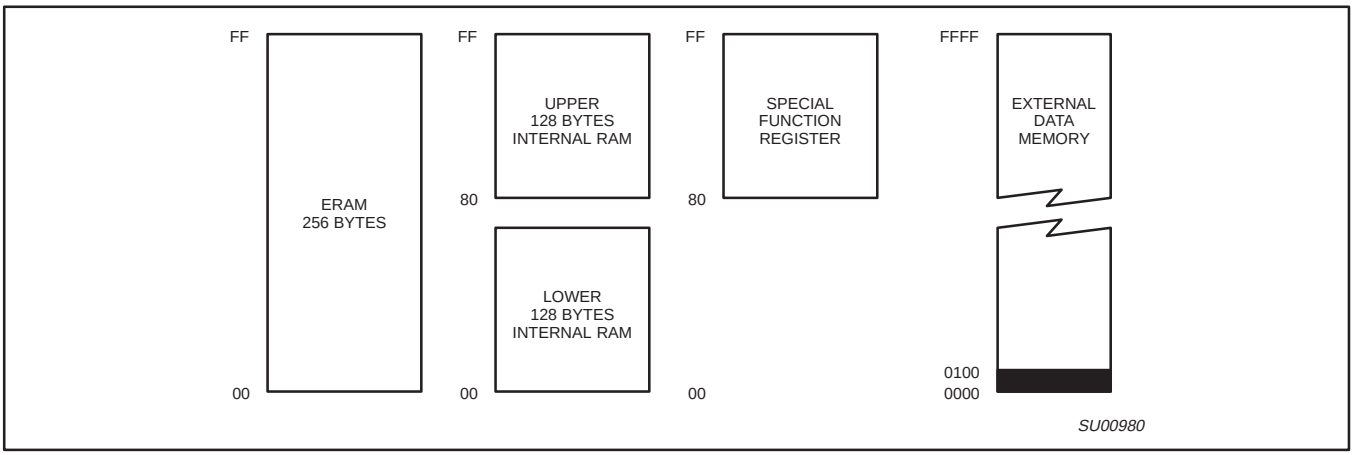

Figure 5. Internal and External Data Memory Address Space with EXTRAM = 0

Dual DPTR

The dual DPTR structure (see Figure 6) is a way by which the chip will specify the address of an external data memory location. There are two 16-bit DPTR registers that address the external memory, and a single bit called DPS = AUXR1/bit0 that allows the program code to switch between them.

The DPS bit status should be saved by software when switching between DPTR0 and DPTR1.

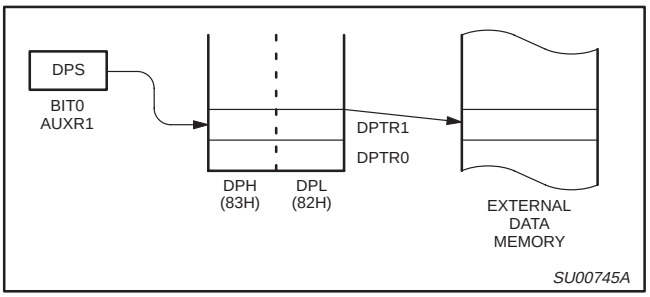

Figure 6.

Note that bit 2 is not writable and is always read as a zero. This allows the DPS bit to be quickly toggled simply by executing an INC AUXR1 instruction without affecting the other bits.

DPTR Instructions

The instructions that refer to DPTR refer to the data pointer that is currently selected using the AUXR1/bit 0 register. The six instructions that use the DPTR are as follows:

INC DPTR	Increments the data pointer by 1
MOV DPTR, #data16	Loads the DPTR with a 16-bit constant
MOV A, @ A+DPTR	Move code byte relative to DPTR to ACC
MOVX A, @ DPTR	Move external RAM (16-bit address) to ACC
MOVX @ DPTR , A	Move ACC to external RAM (16-bit address)
JMP @ A + DPTR	Jump indirect relative to DPTR

The data pointer can be accessed on a byte-by-byte basis by specifying the low or high byte in an instruction which accesses the SFRs. See application note AN458 for more details.

AUXR1 Address = A2H Reset Value = 0000 00x0B

Not Bit Addressable

	ADC8	**AIDL**	**SRST**	**GF2**	**WUPD**	**0**	—	**DSP**
Bit:	7	6	5	4	3	2	1	0

Symbol	**Function**
DPS	Data Pointer Switch—switches between DPRT0 and DPTR1.

DPS	**Operating Mode**
0	DPTR0
1	DPTR1

WUPD	Enable wakeup from powerdown.
GF2	General Purpose Flag—set and cleared by the user.
SRST	Software Reset
AIDL	Enables the ADC during idle mode.
ADC8	ADC Mode Switch—switches between 10-bit conversion and 8-bit conversion.

ADC8	**Operating Mode**
0	10-bit conversion (50 machine cycles)
1	8-bit conversion (24 machine cycles)

NOTE:
*User software should not write 1s to reserved bits. These bits may be used in future 8051 family products to invoke new features. In that case, the reset or inactive value of the new bit will be 0, and its active value will be 1. The value read from a reserved bit is indeterminate.

SU01081

Figure 7. AUXR1: DPTR Control Register

Enhanced UART

The UART operates in all of the usual modes that are described in the first section of *Data Handbook IC20, 80C51-Based 8-Bit Microcontrollers*. In addition the UART can perform framing error detect by looking for missing stop bits, and automatic address recognition. The UART also fully supports multiprocessor communication as does the standard 80C51 UART.

When used for framing error detect the UART looks for missing stop bits in the communication. A missing bit will set the FE bit in the S0CON register. The FE bit shares the S0CON.7 bit with SM0 and the function of S0CON.7 is determined by PCON.6 (SMOD0) (see Figure 8). If SMOD0 is set then S0CON.7 functions as FE. S0CON.7 functions as SM0 when SMOD0 is cleared. When used as FE S0CON.7 can only be cleared by software. Refer to Figure 9.

Automatic Address Recognition

Automatic Address Recognition is a feature which allows the UART to recognize certain addresses in the serial bit stream by using hardware to make the comparisons. This feature saves a great deal of software overhead by eliminating the need for the software to examine every serial address which passes by the serial port. This feature is enabled by setting the SM2 bit in S0CON. In the 9 bit UART modes, mode 2 and mode 3, the Receive Interrupt flag (RI) will be automatically set when the received byte contains either the “Given” address or the “Broadcast” address. The 9 bit mode requires that the 9th information bit is a 1 to indicate that the received information is an address and not data. Automatic address recognition is shown in Figure 10.

The 8 bit mode is called Mode 1. In this mode the RI flag will be set if SM2 is enabled and the information received has a valid stop bit following the 8 address bits and the information is either a Given or Broadcast address.

S0CON Address = 98H Reset Value = 0000 0000B

Bit Addressable

	SM0/FE	**SM1**	**SM2**	**REN**	**TB8**	**RB8**	**TI**	**RI**
Bit:	7	6	5	4	3	2	1	0
	(SMOD0 = 0/1)*							

Symbol	Function
FE	Framing Error bit. This bit is set by the receiver when an invalid stop bit is detected. The FE bit is not cleared by valid frames but should be cleared by software. The SMOD0 bit must be set to enable access to the FE bit.
SM0	Serial Port Mode Bit 0, (SMOD0 must = 0 to access bit SM0)
SM1	Serial Port Mode Bit 1

SM0	**SM1**	**Mode**	**Description**	**Baud Rate****
0	0	0	shift register	$f_{OSC}/6$
0	1	1	8-bit UART	variable
1	0	2	9-bit UART	$f_{OSC}/32$ or $f_{OSC}/16$
1	1	3	9-bit UART	variable

SM2	Enables the Automatic Address Recognition feature in Modes 2 or 3. If SM2 = 1 then RI will not be set unless the received 9th data bit (RB8) is 1, indicating an address, and the received byte is a Given or Broadcast Address. In Mode 1, if SM2 = 1 then RI will not be activated unless a valid stop bit was received, and the received byte is a Given or Broadcast Address. In Mode 0, SM2 should be 0.
REN	Enables serial reception. Set by software to enable reception. Clear by software to disable reception.
TB8	The 9th data bit that will be transmitted in Modes 2 and 3. Set or clear by software as desired.
RB8	In modes 2 and 3, the 9th data bit that was received. In Mode 1, if SM2 = 0, RB8 is the stop bit that was received. In Mode 0, RB8 is not used.
TI	Transmit interrupt flag. Set by hardware at the end of the 8th bit time in Mode 0, or at the beginning of the stop bit in the other modes, in any serial transmission. Must be cleared by software.
RI	Receive interrupt flag. Set by hardware at the end of the 8th bit time in Mode 0, or halfway through the stop bit time in the other modes, in any serial reception (except see SM2). Must be cleared by software.

NOTE:
*SMOD0 is located at PCON6.
**f_{OSC} = oscillator frequency

SU01445

Figure 8. S0CON: Serial Port Control Register

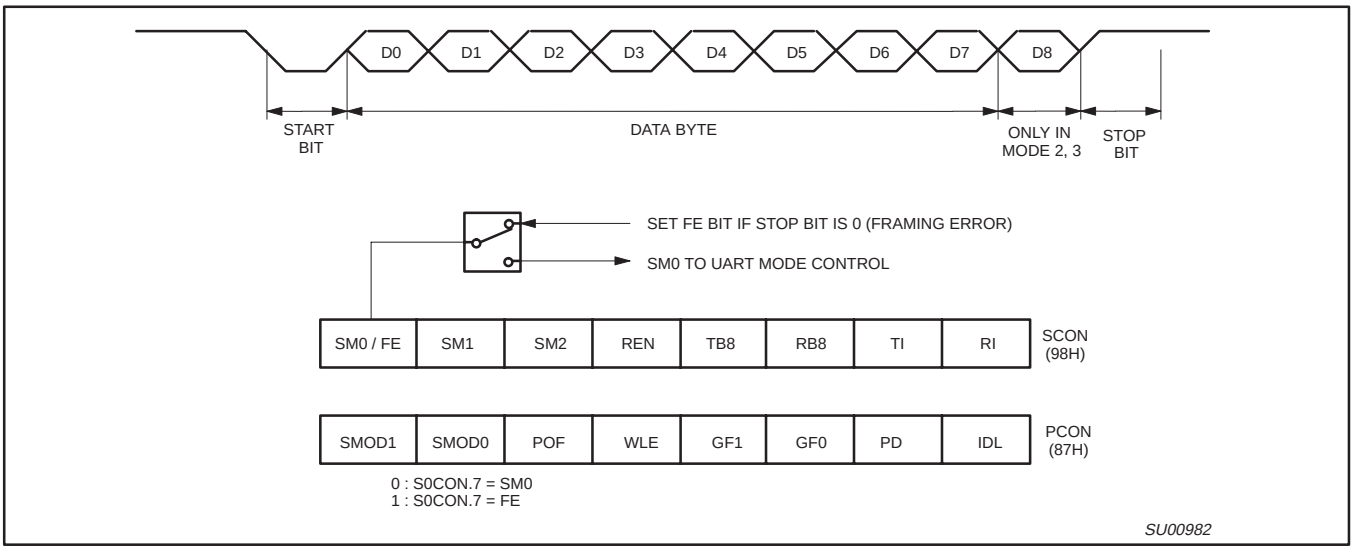

Figure 9. UART Framing Error Detection

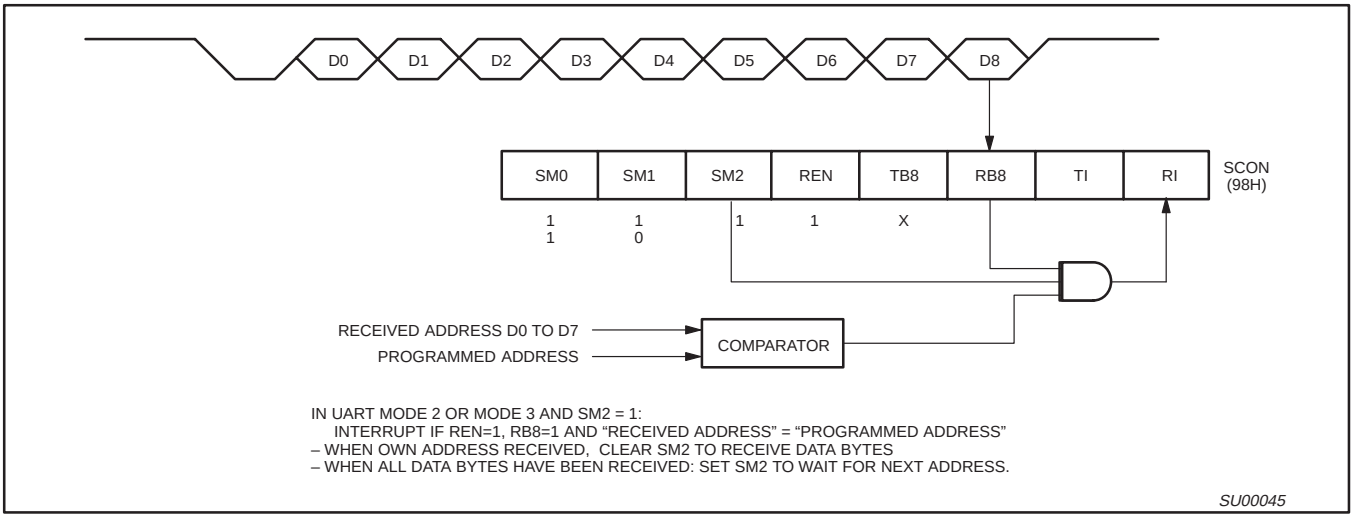

Figure 10. UART Multiprocessor Communication, Automatic Address Recognition

Mode 0 is the Shift Register mode and SM2 is ignored.

Using the Automatic Address Recognition feature allows a master to selectively communicate with one or more slaves by invoking the Given slave address or addresses. All of the slaves may be contacted by using the Broadcast address. Two special Function Registers are used to define the slave's address, SADDR, and the address mask, SADEN. SADEN is used to define which bits in the SADDR are to b used and which bits are "don't care". The SADEN mask can be logically ANDed with the SADDR to create the "Given" address which the master will use for addressing each of the slaves. Use of the Given address allows multiple slaves to be recognized while excluding others. The following examples will help to show the versatility of this scheme:

Slave 0	SADDR	=	1100 0000
	SADEN	=	1111 1101
	Given	=	1100 00X0
Slave 1	SADDR	=	1100 0000
	SADEN	=	1111 1110
	Given	=	1100 000X

In the above example SADDR is the same and the SADEN data is used to differentiate between the two slaves. Slave 0 requires a 0 in bit 0 and it ignores bit 1. Slave 1 requires a 0 in bit 1 and bit 0 is ignored. A unique address for Slave 0 would be 1100 0010 since slave 1 requires a 0 in bit 1. A unique address for slave 1 would be 1100 0001 since a 1 in bit 0 will exclude slave 0. Both slaves can be selected at the same time by an address which has bit 0 = 0 (for slave 0) and bit 1 = 0 (for slave 1). Thus, both could be addressed with 1100 0000.

In a more complex system the following could be used to select slaves 1 and 2 while excluding slave 0:

Slave 0	SADDR	=	1100 0000
	SADEN	=	1111 1001
	Given	=	1100 0XX0
Slave 1	SADDR	=	1110 0000
	SADEN	=	1111 1010
	Given	=	1110 0X0X
Slave 2	SADDR	=	1110 0000
	SADEN	=	1111 1100
	Given	=	1110 00XX

In the above example the differentiation among the 3 slaves is in the lower 3 address bits. Slave 0 requires that bit 0 = 0 and it can be uniquely addressed by 1110 0110. Slave 1 requires that bit 1 = 0 and it can be uniquely addressed by 1110 and 0101. Slave 2 requires that bit 2 = 0 and its unique address is 1110 0011. To select Slaves 0 and 1 and exclude Slave 2 use address 1110 0100, since it is necessary to make bit 2 = 1 to exclude slave 2.

The Broadcast Address for each slave is created by taking the logical OR of SADDR and SADEN. Zeros in this result are trended as don't-cares. In most cases, interpreting the don't-cares as ones, the broadcast address will be FF hexadecimal.

Upon reset SADDR (SFR address 0A9H) and SADEN (SFR address 0B9H) are leaded with 0s. This produces a given address of all "don't cares" as well as a Broadcast address of all "don't cares". This effectively disables the Automatic Addressing mode and allows the microcontroller to use standard 80C51 type UART drivers which do not make use of this feature.

Timer T2

Timer T2 is a 16-bit timer consisting of two registers TMH2 (HIGH byte) and TML2 (LOW byte). The 16-bit timer/counter can be switched off or clocked via a prescaler from one of two sources: $f_{OSC}/12$ or an external signal. When Timer T2 is configured as a counter, the prescaler is clocked by an external signal on T2 (P1.4). A rising edge on T2 increments the prescaler, and the maximum repetition rate is one count per machine cycle (1 MHz with a 12 MHz oscillator).

The maximum repetition rate for Timer T2 is twice the maximum repetition rate for Timer 0 and Timer 1. T2 (P1.4) is sampled at S2P1 and again at S5P1 (i.e., twice per machine cycle). A rising edge is detected when T2 is LOW during one sample and HIGH during the next sample. To ensure that a rising edge is detected, the input signal must be LOW for at least 1/2 cycle and then HIGH for at least 1/2 cycle. If a rising edge is detected before the end of S2P1, the timer will be incremented during the following cycle; otherwise it will be incremented one cycle later. The prescaler has a programmable division factor of 1, 2, 4, or 8 and is cleared if its division factor or input source is changed, or if the timer/counter is reset.

Timer T2 may be read "on the fly" but possesses no extra read latches, and software precautions may have to be taken to avoid misinterpretation in the event of an overflow from least to most significant byte while Timer T2 is being read. Timer T2 is not loadable and is reset by the RST signal or by a rising edge on the input signal RT2, if enabled. RT2 is enabled by setting bit T2ER (TM2CON.5).

When the least significant byte of the timer overflows or when a 16-bit overflow occurs, an interrupt request may be generated. Either or both of these overflows can be programmed to request an interrupt. In both cases, the interrupt vector will be the same. When the lower byte (TML2) overflows, flag T2B0 (TM2CON) is set and flag T20V (TM2IR) is set when TMH2 overflows. These flags are set one cycle after an overflow occurs. Note that when T20V is set, T2B0 will also be set. To enable the byte overflow interrupt, bits ET2 (IEN1.7, enable overflow interrupt, see Figure 11) and T2IS0 (TM2CON.6, byte overflow interrupt select) must be set. Bit TWB0 (TM2CON.4) is the Timer T2 byte overflow flag.

To enable the 16-bit overflow interrupt, bits ET2 (IE1.7, enable overflow interrupt) and T2IS1 (TM2CON.7, 16-bit overflow interrupt select) must be set. Bit T2OV (TM2IR.7) is the Timer T2 16-bit overflow flag. All interrupt flags must be reset by software. To enable both byte and 16-bit overflow, T2IS0 and T2IS1 must be set and two interrupt service routines are required. A test on the overflow flags indicates which routine must be executed. For each routine, only the corresponding overflow flag must be cleared.

Timer T2 may be reset by a rising edge on RT2 (P1.5) if the Timer T2 external reset enable bit (T2ER) in T2CON is set. This reset also clears the prescaler. In the idle mode, the timer/counter and prescaler are reset and halted. Timer T2 is controlled by the TM2CON special function register (see Figure 12).

Timer T2 Extension: When a 12 MHz oscillator is used, a 16-bit overflow on Timer T2 occurs every 65.5, 131, 262, or 524 ms, depending on the prescaler division ratio; i.e., the maximum cycle time is approximately 0.5 seconds. In applications where cycle times are greater than 0.5 seconds, it is necessary to extend Timer T2. This is achieved by selecting fosc/12 as the clock source (set T2MS0, reset T2MS1), setting the prescaler division ration to 1/8 (set T2P0, set T2P1), disabling the byte overflow interrupt (reset T2IS0) and enabling the 16-bit overflow interrupt (set T2IS1). The following software routine is written for a three-byte extension which gives a maximum cycle time of approximately 2400 hours.

```
OVINT: PUSH   ACC      ;save accumulator
       PUSH   PSW      ;save status
       INC    TIMEX1   ;increment first byte (low order)
                       ;of extended timer
       MOV    A,TIMEX1
       JNZ    INTEX    ;jump to INTEX if ;there is no overflow

       INC    TIMEX2   ;increment second byte
       MOV    A,TIMEX2
       JNZ    INTEX    ;jump to INTEX if there is no overflow
       INC    TIMEX3   ;increment third byte (high order)

INTEX: CLR    T2OV     ;reset interrupt flag
       POP    PSW      ;restore status
       POP    ACC      ;restore accumulator
       RETI            ;return from interrupt
```

Timer T2, Capture and Compare Logic: Timer T2 is connected to four 16-bit capture registers and three 16-bit compare registers. A capture register may be used to capture the contents of Timer T2 when a transition occurs on its corresponding input pin. A compare register may be used to set, reset, or toggle port 4 output pins at certain pre-programmable time intervals.

The combination of Timer T2 and the capture and compare logic is very powerful in applications involving rotating machinery, automotive injection systems, etc. Timer T2 and the capture and compare logic are shown in Figure 13.

Reset Value = 00H

	7	6	5	4	3	2	1	0
IEN1 (E8H)	ET2	ECM2	ECM1	ECM0	ECT3	ECT2	ECT1	ECT0
	(MSB)							(LSB)

BIT	SYMBOL	FUNCTION
IEN1.7	ET2	Enable Timer T2 overflow interrupt(s)
IEN1.6	ECM2	Enable T2 Comparator 2 interrupt
IEN1.5	ECM1	Enable T2 Comparator 1 interrupt
IEN1.4	ECM0	Enable T2 Comparator 0 interrupt
IEN1.3	ECT3	Enable T2 Capture register 3 interrupt
IEN1.2	ECT2	Enable T2 Capture register 2 interrupt
IEN1.1	ECT1	Enable T2 Capture register 1 interrupt
IEN1.0	ECT0	Enable T2 Capture register 0 interrupt

SU01083

Figure 11. Timer T2 Interrupt Enable Register (IEN1)

Reset Value = 00H

	7	6	5	4	3	2	1	0
TM2CON (EAH)	T2IS1	T2IS0	T2ER	T2BO	T2P1	T2P0	T2MS1	T2MS0
	(MSB)							(LSB)

BIT	SYMBOL	FUNCTION
TM2CON.7	TSIS1	Timer T2 16-bit overflow interrupt select
TM2CON.6	T2IS0	Timer T2 byte overflow interrupt select
TM2CON.5	T2ER	Timer T2 external reset enable. When this bit is set, Timer T2 may be reset by a rising edge on RT2 (P1.5).
TM2CON.4	T2BO	Timer T2 byte overflow interrupt flag
TM2CON.3	T2P1	Timer T2 prescaler select
TM2CON.2	T2P0	

T2P1	T2P0	Timer T2 Clock
0	0	Clock source
0	1	Clock source/2
1	0	Clock source/4
1	1	Clock source/8

TM2CON.1	T2MS1	Timer T2 mode select
TM2CON.0	T2MS0	

T2MS1	T2MS0	Mode Selected
0	0	Timer T2 halted (off)
0	1	T2 clock source = $f_{OSC}/12$
1	0	Test mode; do not use
1	1	T2 clock source = pin T2

SU01084

Figure 12. T2 Control Register (TM2CON)

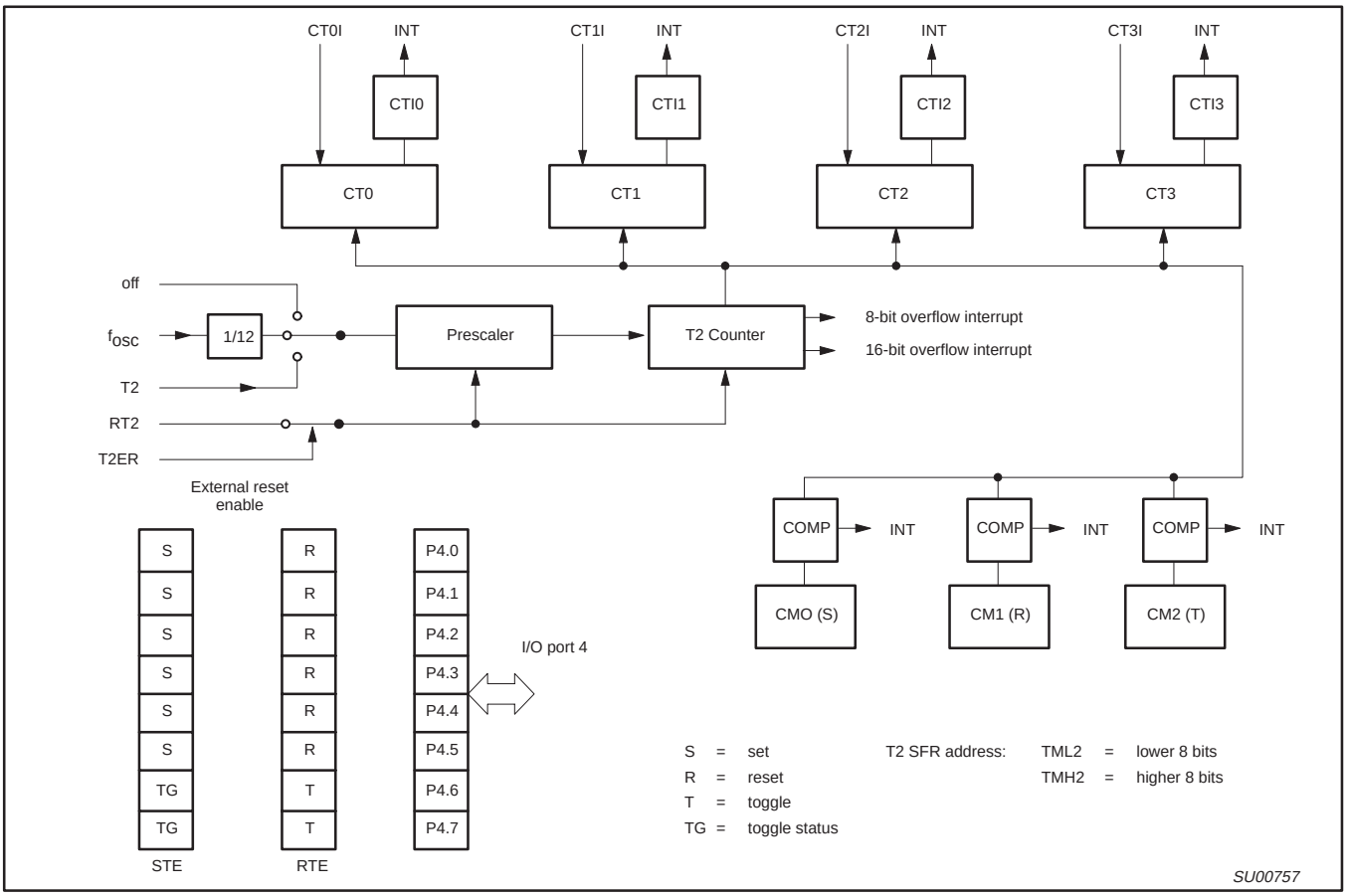

Figure 13. Block Diagram of Timer 2

Capture Logic: The four 16-bit capture registers that Timer T2 is connected to are: CT0, CT1, CT2, and CT3. These registers are loaded with the contents of Timer T2, and an interrupt is requested upon receipt of the input signals CT0I, CT1I, CT2I, or CT3I. These input signals are shared with port 1. The four interrupt flags are in the Timer T2 interrupt register (TM2IR special function register). If the capture facility is not required, these inputs can be regarded as additional external interrupt inputs.

Using the capture control register CTCON (see Figure 14), these inputs may capture on a rising edge, a falling edge, or on either a rising or falling edge. The inputs are sampled during S1P1 of each cycle. When a selected edge is detected, the contents of Timer T2 are captured at the end of the cycle.

Measuring Time Intervals Using Capture Registers: When a recurring external event is represented in the form of rising or falling edges on one of the four capture pins, the time between two events can be measured using Timer T2 and a capture register. When an event occurs, the contents of Timer T2 are copied into the relevant capture register and an interrupt request is generated. The interrupt service routine may then compute the interval time if it knows the previous contents of Timer T2 when the last event occurred. With a 12 MHz oscillator, Timer T2 can be programmed to overflow every 524 ms. When event interval times are shorter than this, computing the interval time is simple, and the interrupt service routine is short. For longer interval times, the Timer T2 extension routine may be used.

Compare Logic: Each time Timer T2 is incremented, the contents of the three 16-bit compare registers CM0, CM1, and CM2 are compared with the new counter value of Timer T2. When a match is found, the corresponding interrupt flag in TM2IR is set at the end of the following cycle. When a match with CM0 occurs, the controller sets bits 0-5 of port 4 if the corresponding bits of the set enable register STE are at logic 1.

Reset Value = 00H

	7	6	5	4	3	2	1	0
CTCON (EBH)	CTN3	CTP3	CTN2	CTP2	CTN1	CTP1	CTN1	CTP0
	(MSB)							(LSB)

BIT	SYMBOL	CAPTURE/INTERRUPT ON:
CTCON.7	CTN3	Capture Register 3 triggered by a falling edge on CT3I
CTCON.6	CTP3	Capture Register 3 triggered by a rising edge on CT3I
CTCON.5	CTN2	Capture Register 2 triggered by a falling edge on CT2I
CTCON.4	CTP2	Capture Register 2 triggered by a rising edge on CT2I
CTCON.3	CTN1	Capture Register 1 triggered by a falling edge on CT1I
CTCON.2	CTP1	Capture Register 1 triggered by a rising edge on CT1I
CTCON.1	CTN0	Capture Register 0 triggered by a falling edge on CT0I
CTCON.0	CTP0	Capture Register 0 triggered by a rising edge on CT0I

SU01085

Figure 14. Capture Control Register (CTCON)

When a match with CM1 occurs, the controller resets bits 0-5 of port 4 if the corresponding bits of the reset/toggle enable register RTE are at logic 1 (see Figure 15 for RTE register function). If RTE is “0”, then P4.n is not affected by a match between CM1 or CM2 and Timer 2. When a match with CM2 occurs, the controller “toggles” bits 6 and 7 of port 4 if the corresponding bits of the RTE are at logic 1. The port latches of bits 6 and 7 are not toggled.
Two additional flip-flops store the last operation, and it is these flip-flops that are toggled.

Thus, if the current operation is “set,” the next operation will be “reset” even if the port latch is reset by software before the “reset” operation occurs. The first “toggle” after a chip RESET will set the port latch. The contents of these two flip-flops can be read at STE.6 and STE.7 (corresponding to P4.6 and P4.7, respectively). Bits STE.6 and STE.7 are read only (see Figure 16 for STE register function). A logic 1 indicates that the next toggle will set the port latch; a logic 0 indicates that the next toggle will reset the port latch. CM0, CM1, and CM2 are reset by the RST signal.

The modified port latch information appears at the port pin during S5P1 of the cycle following the cycle in which a match occurred. If the port is modified by software, the outputs change during S1P1 of the following cycle. Each port 4 bit can be set or reset by software at any time. A hardware modification resulting from a comparator match takes precedence over a software modification in the same cycle. When the comparator results require a “set” and a “reset” at the same time, the port latch will be reset.

Timer T2 Interrupt Flag Register TM2IR: Eight of the nine Timer T2 interrupt flags are located in special function register TM2IR (see Figure 17). The ninth flag is TM2CON.4.

The CT0I and CT1I flags are set during S4 of the cycle in which the contents of Timer T2 are captured. CT0I is scanned by the interrupt logic during S2, and CT1I is scanned during S3. CT2I and CT3I are set during S6 and are scanned during S4 and S5. The associated interrupt requests are recognized during the following cycle. If these flags are polled, a transition at CT0I or CT1I will be recognized one cycle before a transition on CT2I or CT3I since registers are read during S5. The CMI0, CMI1, and CMI2 flags are set during S6 of the cycle following a match. CMI0 is scanned by the interrupt logic during S2; CMI1 and CMI2 are scanned during S3 and S4. A match will be recognized by the interrupt logic (or by polling the flags) two cycles after the match takes place.

The 16-bit overflow flag (T2OV) and the byte overflow flag (T2BO) are set during S6 of the cycle in which the overflow occurs. These flags are recognized by the interrupt logic during the next cycle.

Special function register IP1 (Figure 17) is used to determine the Timer T2 interrupt priority. Setting a bit high gives that function a high priority, and setting a bit low gives the function a low priority. The functions controlled by the various bits of the IP1 register are shown in Figure 17.

Reset Value = 00H

	7	6	5	4	3	2	1	0
RTE (EFH)	TP47	TP46	RP45	RP44	RP43	RP42	RO41	RP40
	(MSB)							(LSB)

BIT	SYMBOL	FUNCTION
RTE.7	TP47	If “1” then P4.7 toggles on a match between CM1 and Timer T2
RTE.6	TP46	If “1” then P4.6 toggles on a match between CM1 and Timer T2
RTE.5	RP45	If “1” then P4.5 is reset on a match between CM1 and Timer T2
RTE.4	RP44	If “1” then P4.4 is reset on a match between CM1 and Timer T2
RTE.3	RP43	If “1” then P4.3 is reset on a match between CM1 and Timer T2
RTE.2	RP42	If “1” then P4.2 is reset on a match between CM1 and Timer T2
RTE.1	RP41	If “1” then P4.1 is reset on a match between CM1 and Timer T2
RTE.0	RP40	If “1” then P4.0 is reset on a match between CM1 and Timer T2

SU01086

Figure 15. Reset/Toggle Enable Register (RTE)

Reset Value = C0H

	7	6	5	4	3	2	1	0
STE (EEH)	TG47	TG46	SP45	SP44	SP43	SP42	SP41	SP40
	(MSB)							(LSB)

BIT	SYMBOL	FUNCTION
STE.7	TG47	Toggle flip-flops
STE.6	TG46	Toggle flip-flops
STE.5	SP45	If “1” then P4.5 is set on a match between CM0 and Timer T2
STE.4	SP44	If “1” then P4.4 is set on a match between CM0 and Timer T2
STE.3	SP43	If “1” then P4.3 is set on a match between CM0 and Timer T2
STE.2	SP42	If “1” then P4.2 is set on a match between CM0 and Timer T2
STE.1	SP41	If “1” then P4.1 is set on a match between CM0 and Timer T2
STE.0	SP40	If “1” then P4.0 is set on a match between CM0 and Timer T2

SU01087

Figure 16. Set Enable Register (STE)

Reset Value = 00H

	7	6	5	4	3	2	1	0
TM2IR (C8H)	T2OV	CMI2	CMI1	CMI0	CTI3	CTI2	CTI1	CTI0
	(MSB)							(LSB)

BIT	SYMBOL	FUNCTION
TM2IR.7	T2OV	Timer T2 16-bit overflow interrupt flag
TM2IR.6	CMI2	CM2 interrupt flag
TM2IR.5	CMI1	CM1 interrupt flag
TM2IR.4	CMI0	CM0 interrupt flag
TM2IR.3	CTI3	CT3 interrupt flag
TM2IR.2	CTI2	CT2 interrupt flag
TM2IR.1	CTI1	CT1 interrupt flag
TM2IR.0	CTI0	CT0 interrupt flag

Interrupt Flag Register (TM2IR)

Reset Value = 00H

	7	6	5	4	3	2	1	0
IP1 (F8H)	PT2	PCM2	PCM1	PCM0	PCT3	PCT2	PCT1	PCT0
	(MSB)							(LSB)

BIT	SYMBOL	FUNCTION
IP1.7	PT2	Timer T2 overflow interrupt(s) priority level
IP1.6	PCM2	Timer T2 comparator 2 interrupt priority level
IP1.5	PCM1	Timer T2 comparator 1 interrupt priority level
IP1.4	PCM0	Timer T2 comparator 0 interrupt priority level
IP1.3	PCT3	Timer T2 capture register 3 interrupt priority level
IP1.2	PCT2	Timer T2 capture register 2 interrupt priority level
IP1.1	PCT1	Timer T2 capture register 1 interrupt priority level
IP1.0	PCT0	Timer T2 capture register 0 interrupt priority level

Timer 2 Interrupt Priority Register (IP1)

SU01088

Figure 17. Interrupt Flag Register (TM2IR) and Timer T2 Interrupt Priority Register (IP1)

Timer T3, The Watchdog Timer

In addition to Timer T2 and the standard timers, a watchdog timer is also incorporated on the P87C554. The purpose of a watchdog timer is to reset the microcontroller if it enters erroneous processor states (possibly caused by electrical noise or RFI) within a reasonable period of time. An analogy is the “dead man’s handle” in railway locomotives. When enabled, the watchdog circuitry will generate a system reset if the user program fails to reload the watchdog timer within a specified length of time known as the “watchdog interval.”

Watchdog Circuit Description: The watchdog timer (Timer T3) consists of an 8-bit timer with an 11-bit prescaler as shown in Figure 18. The prescaler is fed with a signal whose frequency is 1/12 the oscillator frequency (1 MHz with a 12 MHz oscillator). The 8-bit timer is incremented every “t” seconds, where:

$t = 12 \times 2048 \times 1/f_{OSC}$
(= 1.5 ms at f_{OSC} = 16 MHz; = 1 ms at f_{OSC} = 24 MHz)

If the 8-bit timer overflows, a short internal reset pulse is generated which will reset the P87C554. A short output reset pulse is also generated at the RST pin. This short output pulse (3 machine cycles) may be destroyed if the RST pin is connected to a capacitor. This would not, however, affect the internal reset operation.

Watchdog operation is activated when external pin $\overline{EW}$ is tied low. When $\overline{EW}$ is tied low, it is impossible to disable the watchdog operation by software.

How to Operate the Watchdog Timer: The watchdog timer has to be reloaded within periods that are shorter than the programmed watchdog interval; otherwise the watchdog timer will overflow and a system reset will be generated. The user program must therefore continually execute sections of code which reload the watchdog timer. The period of time elapsed between execution of these sections of code must never exceed the watchdog interval. When using a 16 MHz oscillator, the watchdog interval is programmable between 1.5 ms and 392 ms. When using a 24 MHz oscillator, the watchdog interval is programmable between 1 ms and 255 ms.

In order to prepare software for watchdog operation, a programmer should first determine how long his system can sustain an erroneous processor state. The result will be the maximum watchdog interval. As the maximum watchdog interval becomes shorter, it becomes more difficult for the programmer to ensure that the user program always reloads the watchdog timer within the watchdog interval, and thus it becomes more difficult to implement watchdog operation.

The programmer must now partition the software in such a way that reloading of the watchdog is carried out in accordance with the above requirements. The programmer must determine the execution times of all software modules. The effect of possible conditional branches, subroutines, external and internal interrupts must all be taken into account. Since it may be very difficult to evaluate the execution times of some sections of code, the programmer should use worst case estimations. In any event, the programmer must make sure that the watchdog is not activated during normal operation.

The watchdog timer is reloaded in two stages in order to prevent erroneous software from reloading the watchdog. First PCON.4 (WLE) must be set. The T3 may be loaded. When T3 is loaded, PCON.4 (WLE) is automatically reset. T3 cannot be loaded if PCON.4 (WLE) is reset. Reload code may be put in a subroutine as it is called frequently. Since Timer T3 is an up-counter, a reload value of 00H gives the maximum watchdog interval (510 ms with a 12 MHz oscillator), and a reload value of 0FFH gives the minimum watchdog interval (2 ms with a 12 MHz oscillator).

In the idle mode, the watchdog circuitry remains active. When watchdog operation is implemented, the power-down mode cannot be used since both states are contradictory. Thus, when watchdog operation is enabled by tying external pin $\overline{EW}$ low, it is impossible to enter the power-down mode, and an attempt to set the power-down bit (PCON.1) will have no effect. PCON.1 will remain at logic 0.

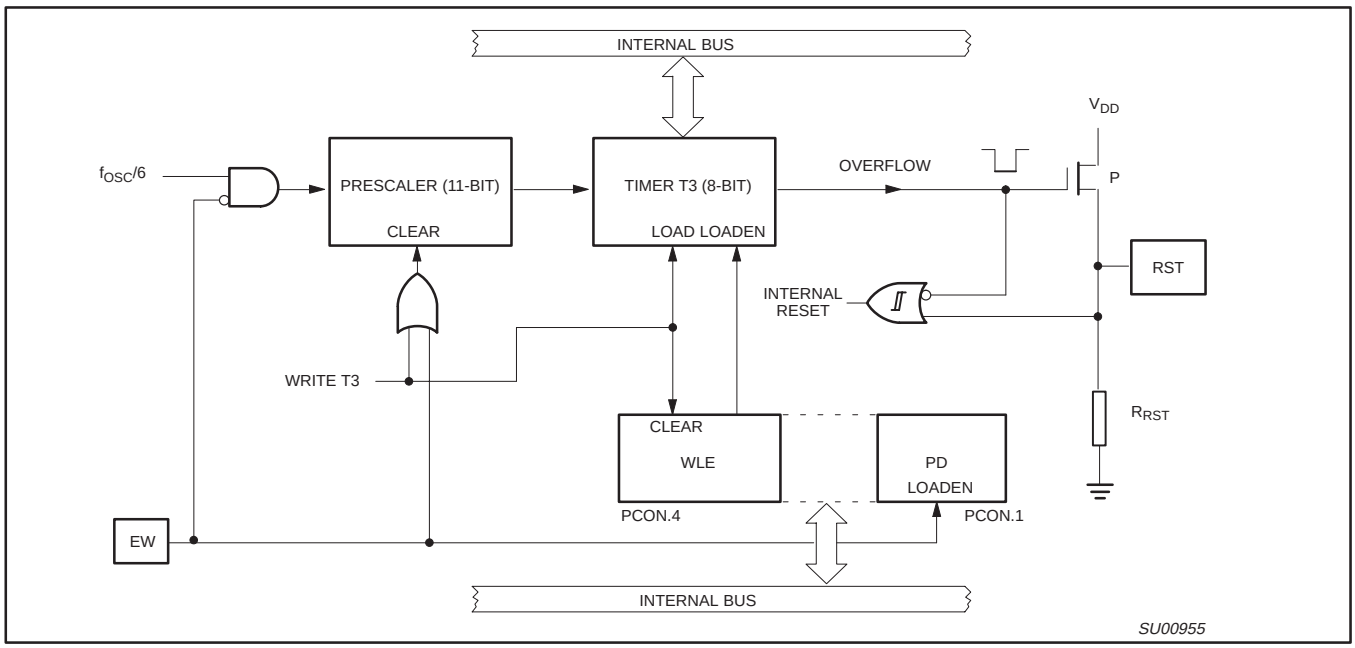

Figure 18. Watchdog Timer

During the early stages of software development/debugging, the watchdog may be disabled by tying the $\overline{EW}$ pin high. At a later stage, $\overline{EW}$ may be tied low to complete the debugging process.

Watchdog Software Example: The following example shows how watchdog operation might be handled in a user program.

```
;at the program start:

T3          EQU  0FFH ;address of watchdog timer T3
PCON        EQU  087H ;address of PCON SFR
WATCH-INTV  EQU  156  ;watchdog interval (e.g., 2x100 ms)

;to be inserted at each watchdog reload location within
;the user program:

LCALL WATCHDOG

;watchdog service routine:

WATCHDOG:  ORL   PCON,#10H  ;set condition flag (PCON.4)
           MOV T3,WATCH-INV  ;load T3 with  watchdog interval
           RET
```

If it is possible for this subroutine to be called in an erroneous state, then the condition flag WLE should be set at different parts of the main program.

Serial I/O

The P87C554 is equipped with two independent serial ports: SIO0 and SIO1. SIO0 is a full duplex UART port and is similar to the Enhanced UART serial port. SIO1 accommodates the I^{2}C bus.

SIO0: SIO0 is a full duplex serial I/O port identical to that of the Enhanced UART except Time 2 cannot be used as a baud rate generator. Its operation is the same, including the use of timer 1 as a baud rate generator.

Port 5 Operation

Port 5 may be used to input up to 8 analog signals to the ADC. Unused ADC inputs may be used to input digital inputs. These inputs have an inherent hysteresis to prevent the input logic from drawing excessive current from the power lines when driven by analog signals. Channel to channel crosstalk (Ct) should be taken into consideration when both analog and digital signals are simultaneously input to Port 5 (see, D.C. characteristics in data sheet).

Port 5 is not bidirectional and may not be configured as an output port. All six ports are multifunctional, and their alternate functions are listed in the Pin Descriptions section of this datasheet.

Pulse Width Modulated Outputs

The P87C554 contains two pulse width modulated output channels (see Figure 19). These channels generate pulses of programmable length and interval. The repetition frequency is defined by an 8-bit prescaler PWMP, which supplies the clock for the counter. The prescaler and counter are common to both PWM channels. The 8-bit counter counts modulo 255, i.e., from 0 to 254 inclusive. The value of the 8-bit counter is compared to the contents of two registers: PWM0 and PWM1. Provided the contents of either of these registers is greater than the counter value, the corresponding $\overline{PWM0}$ or $\overline{PWM1}$ output is set LOW. If the contents of these registers are equal to, or less than the counter value, the output will be HIGH. The pulse-width-ratio is therefore defined by the contents of the registers PWM0 and PWM1. The pulse-width-ratio is in the range of 0 to 1 and may be programmed in increments of 1/255.

Buffered PWM outputs may be used to drive DC motors. The rotation speed of the motor would be proportional to the contents of PWMn. The PWM outputs may also be configured as a dual DAC. In this application, the PWM outputs must be integrated using conventional operational amplifier circuitry. If the resulting output voltages have to be accurate, external buffers with their own analog supply should be used to buffer the PWM outputs before they are integrated. The repetition frequency f_{PWM}, at the PWMn outputs is give by:

$$f_{PWM} = \frac{f_{OSC}}{2 \times (1 + PWMP) \times 255}$$

This gives a repetition frequency range of 123Hz to 31.4kHz (f_{OSC} = 16 MHz). At fosc = 24 MHz, the frequency range is 184Hz to 47.1Hz. By loading the PWM registers with either 00H or FFH, the PWM channels will output a constant HIGH or LOW level, respectively. Since the 8-bit counter counts modulo 255, it can never actually reach the value of the PWM registers when they are loaded with FFH.

When a compare register (PWM0 or PWM1) is loaded with a new value, the associated output is updated immediately. It does not have to wait until the end of the current counter period. Both $\overline{PWMn}$ output pins are driven by push-pull drivers. These pins are not used for any other purpose.

Prescaler frequency control register PWMP Reset Value = 00H

PWMP (FEH)	7	6	5	4	3	2	1	0
	MSB							LSB

PWMP.0-7 Prescaler division factor = PWMP + 1.

Reading PWMP gives the current reload value. The actual count of the prescaler cannot be read.

Reset Value = 00H

PWM0 (FCH) PWM1 (FDH)	7	6	5	4	3	2	1	0
	MSB							LSB

$$\text{PWM0/1.0-7\} Low/high ratio of } \overline{PWMn} = \frac{(PWMn)}{255 - (PWMn)}$$

Analog-to-Digital Converter

The analog input circuitry consists of an 8-input analog multiplexer and a 10-bit, straight binary, successive approximation ADC. The A/D can also be operated in 8-bit mode with faster conversion times by setting bit ADC8 (AUXR1.7). The 8-bit results will be contained in the ADCH register. The analog reference voltage and analog power supplies are connected via separate input pins. For 10-bit accuracy, the conversion takes 50 machine cycles, i.e., 37.5 µs at an oscillator frequency of 16 MHz, 25 µs at an oscillator frequency of 24 MHz. For the 8-bit mode, the conversion takes 24 machine cycles. Input voltage swing is from 0 V to +5 V. Because the internal DAC employs a ratiometric potentiometer, there are no discontinuities in the converter characteristic. Figure 20 shows a functional diagram of the analog input circuitry.

The ADC has the option of either being powered off in idle mode for reduced power consumption or being active in idle mode for reducing internal noise during the conversion. This option is selected by the AIDL bit of AUXR1 register (AUXR1.6). With the AIDL bit set, the ADC is active in the idle mode, and with the AIDL bit cleared, the ADC is powered off in idle mode.

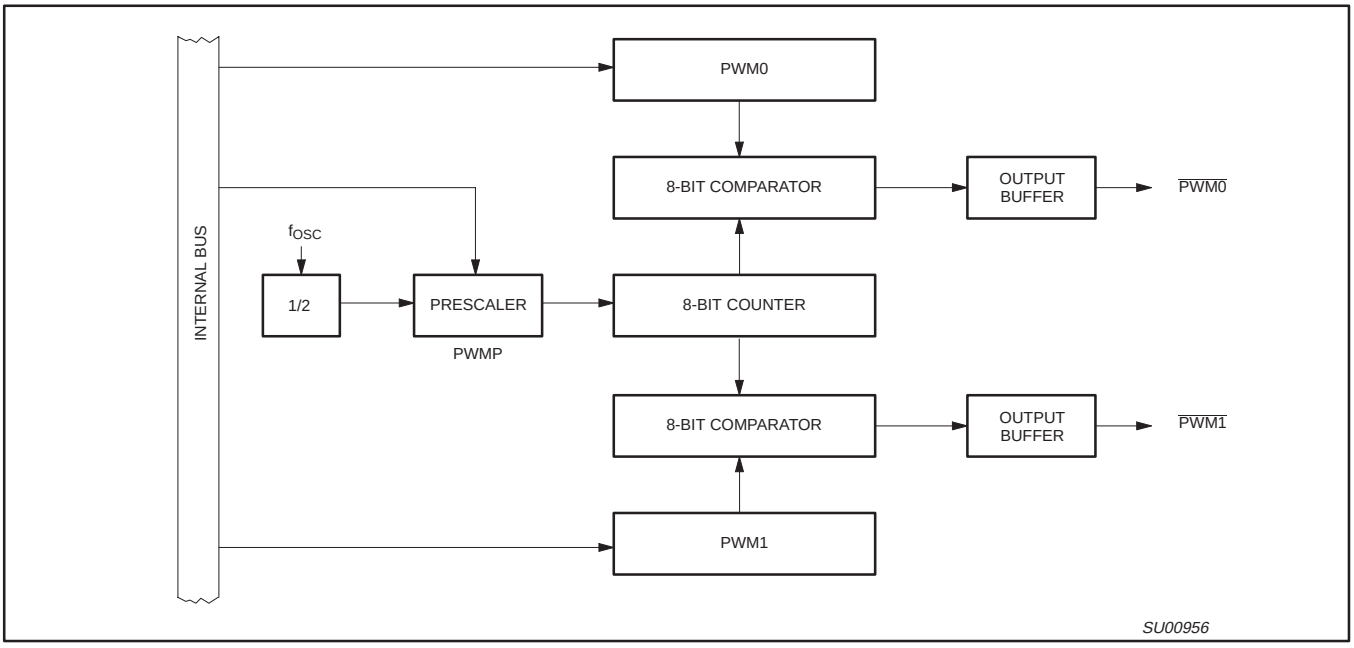

Figure 19. Functional Diagram of Pulse Width Modulated Outputs

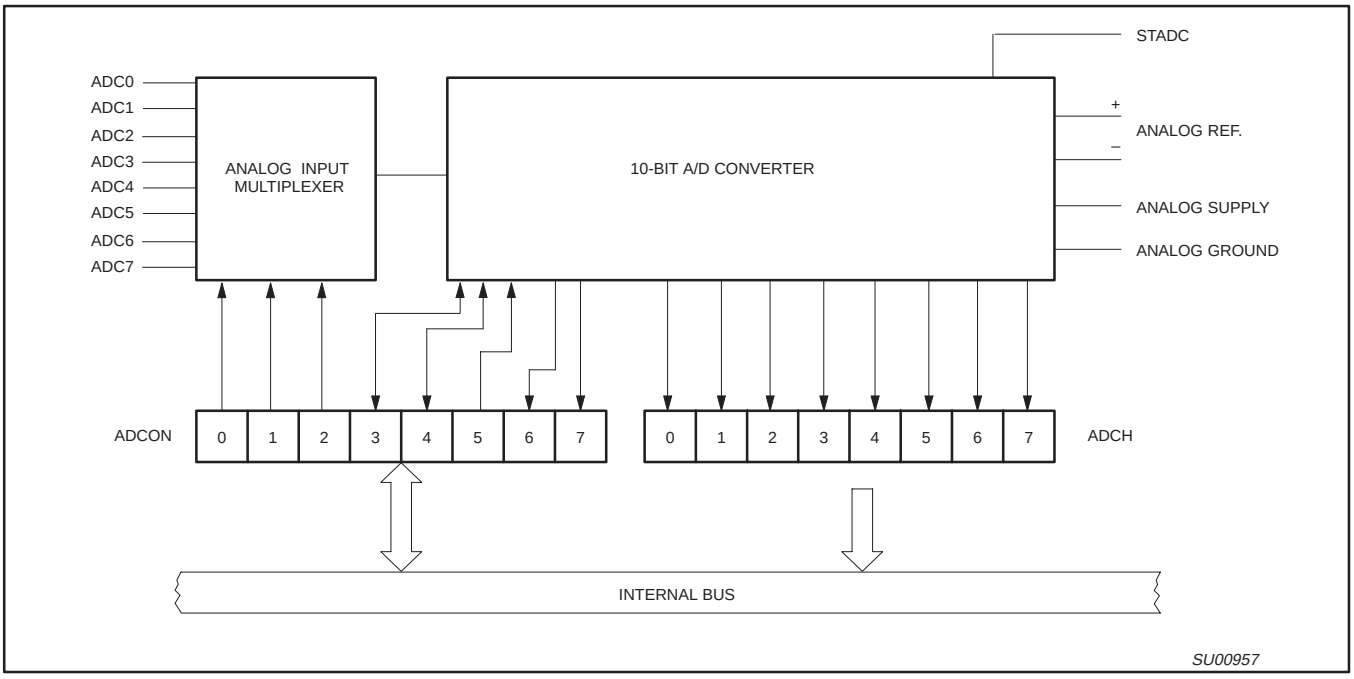

Figure 20. Functional Diagram of Analog Input Circuitry

10-Bit Analog-to-Digital Conversion: Figure 21 shows the elements of a successive approximation (SA) ADC. The ADC contains a DAC which converts the contents of a successive approximation register to a voltage (VDAC) which is compared to the analog input voltage (Vin). The output of the comparator is fed to the successive approximation control logic which controls the successive approximation register. A conversion is initiated by setting ADCS in the ADCON register. ADCS can be set by software only or by either hardware or software.

The software only start mode is selected when control bit ADCON.5 (ADEX) = 0. A conversion is then started by setting control bit ADCON.3 (ADCS). The hardware or software start mode is selected when ADCON.5 = 1, and a conversion may be started by setting ADCON.3 as above or by applying a rising edge to external pin STADC. When a conversion is started by applying a rising edge, a low level must be applied to STADC for at least one machine cycle followed by a high level for at least one machine cycle.

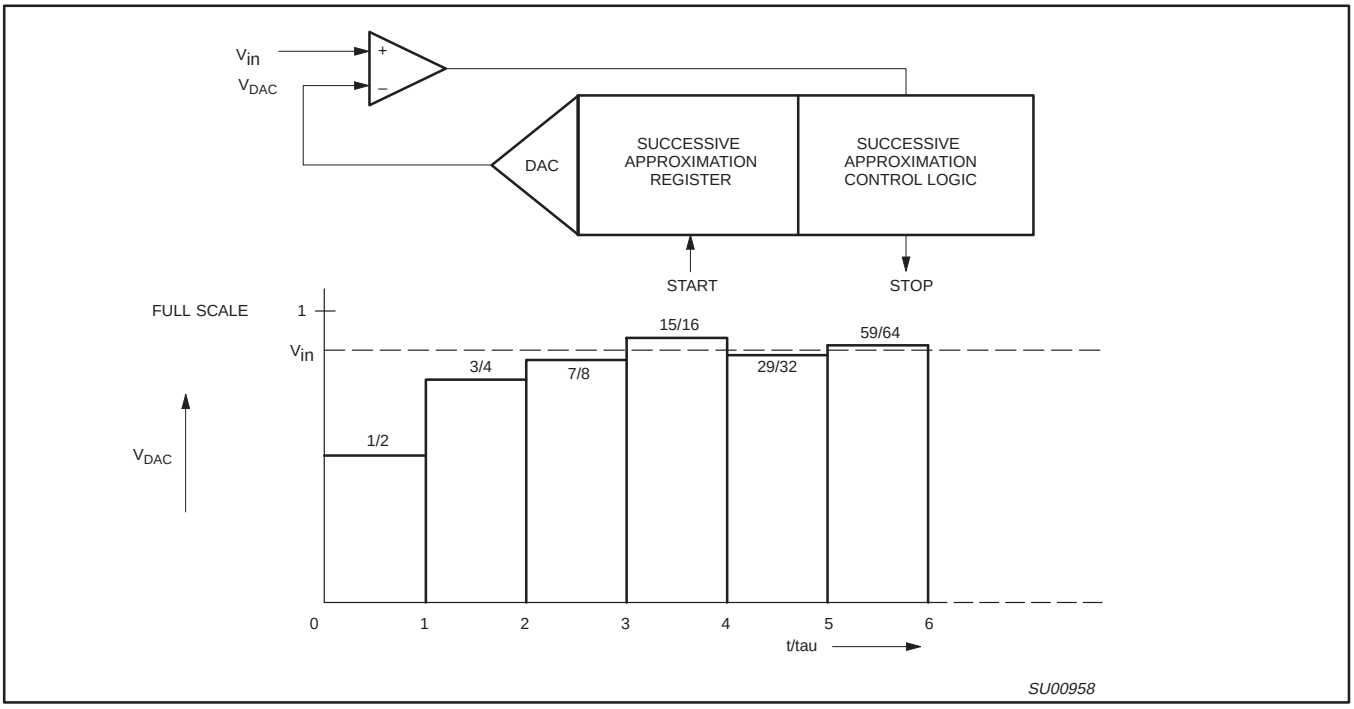

Figure 21. Successive Approximation ADC

The low-to-high transition of STADC is recognized at the end of a machine cycle, and the conversion commences at the beginning of the next cycle. When a conversion is initiated by software, the conversion starts at the beginning of the machine cycle which follows the instruction that sets ADCS. ADCS is actually implemented with two flip-flops: a command flip-flop which is affected by set operations, and a status flag which is accessed during read operations.

The next two machine cycles are used to initiate the converter. At the end of the first cycle, the ADCS status flag is set and a value of “1” will be returned if the ADCS flag is read while the conversion is in progress. Sampling of the analog input commences at the end of the second cycle.

During the next eight machine cycles, the voltage at the previously selected pin of port 5 is sampled, and this input voltage should be stable in order to obtain a useful sample. In any event, the input voltage slew rate must be less than 10V/ms in order to prevent an undefined result.

The successive approximation control logic first sets the most significant bit and clears all other bits in the successive approximation register (10 0000 0000B). The output of the DAC (50% full scale) is compared to the input voltage Vin. If the input voltage is greater than VDAC, then the bit remains set; otherwise it is cleared.

The successive approximation control logic now sets the next most significant bit (11 0000 0000B or 01 0000 0000B, depending on the previous result), and VDAC is compared to Vin again. If the input voltage is greater than VDAC, then the bit being tested remains set; otherwise the bit being tested is cleared. This process is repeated until all ten bits have been tested, at which stage the result of the conversion is held in the successive approximation register. Figure 22 shows a conversion flow chart. The bit pointer identifies the bit under test. The conversion takes four machine cycles per bit.

The end of the 10-bit conversion is flagged by control bit ADCON.4 (ADCI). The upper 8 bits of the result are held in special function register ADCH, and the two remaining bits are held in ADCON.7 (ADC.1) and ADCON.6 (ADC.0). The user may ignore the two least significant bits in ADCON and use the ADC as an 8-bit converter (8 upper bits in ADCH). In any event, the total actual conversion time is 50 machine cycles for the 8XC552 or 24 machine cycles for the 8XC562. ADCI will be set and the ADCS status flag will be reset 50 (or 24) cycles after the command flip-flop (ADCS) is set.

Control bits ADCON.0, ADCON.1, and ADCON.2 are used to control an analog multiplexer which selects one of eight analog channels (see Figure 23). An ADC conversion in progress is unaffected by an external or software ADC start. The result of a completed conversion remains unaffected provided ADCI = logic 1; a new ADC conversion already in progress is aborted when the idle or power-down mode is entered. The result of a completed conversion (ADCI = logic 1) remains unaffected when entering the idle mode.

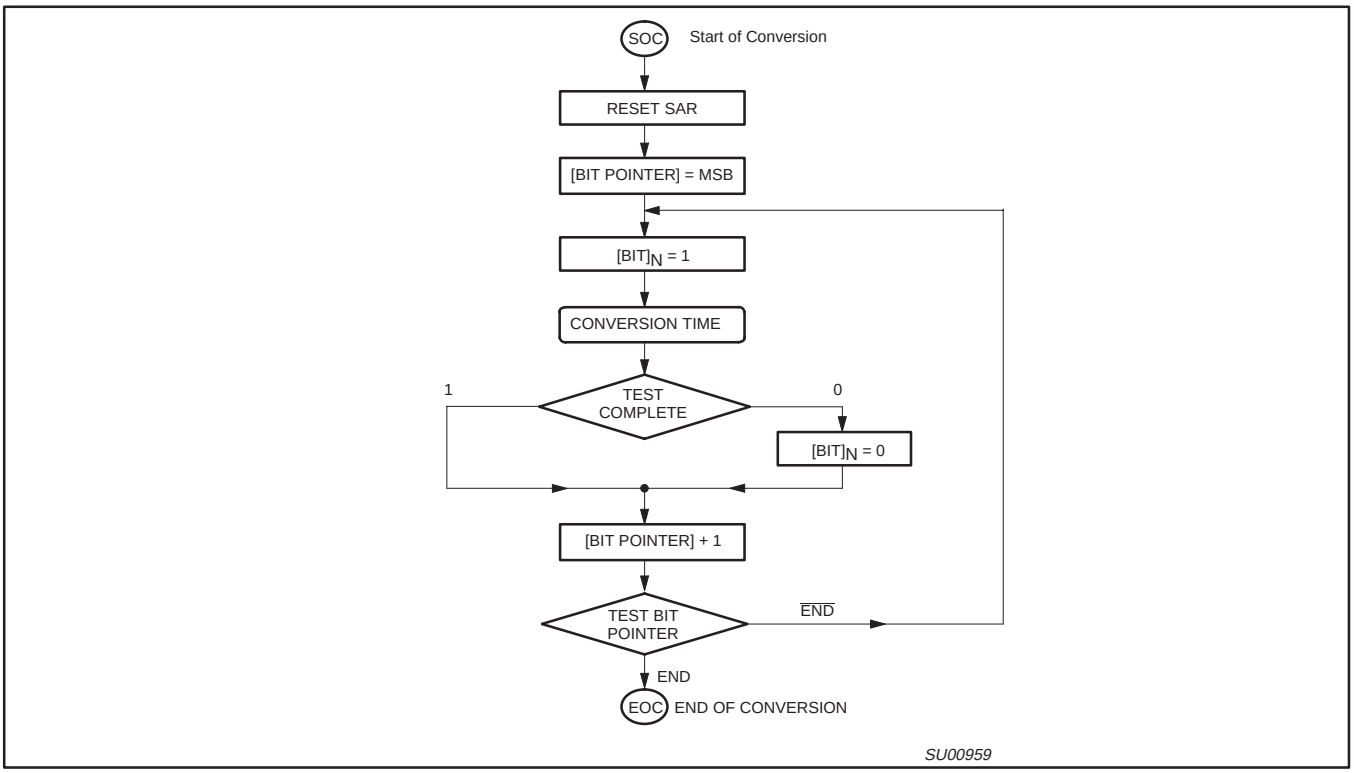

Figure 22. A/D Conversion Flowchart

Reset Value = xx00 0000B

	7	6	5	4	3	2	1	0
ADCON (C5H)	ADC.1	ADC.0	ADEX	ADCI	ADCS	AADR2	AADR1	AADR0
	(MSB)							(LSB)

Bit	Symbol	Function
ADCON.7	ADC.1	Bit 1 of ADC result
ADCON.6	ADC.0	Bit 0 of ADC result
ADCON.5	ADEX	Enable external start of conversion by STADC 0 = Conversion can be started by software only (by setting ADCS) 1 = Conversion can be started by software or externally (by a rising edge on STADC)
ADCON.4	ADCI	ADC interrupt flag: this flag is set when an A/D conversion result is ready to be read. An interrupt is invoked if it is enabled. The flag may be cleared by the interrupt service routine. While this flag is set, the ADC cannot start a new conversion. ADCI cannot be set by software.
ADCON.3	ADCS	ADC start and status: setting this bit starts an A/D conversion. It may be set by software or by the external signal STADC. The ADC logic ensures that this signal is HIGH while the ADC is busy. On completion of the conversion, ADCS is reset immediately after the interrupt flag has been set. ADCS cannot be reset by software. A new conversion may not be started while either ADCS or ADCI is high.

ADCI	ADCS	ADC Status
0	0	ADC not busy; a conversion can be started
0	1	ADC busy; start of a new conversion is blocked
1	0	Conversion completed; start of a new conversion requires ADCI=0
1	1	Conversion completed; start of a new conversion requires ADCI=0

If ADCI is cleared by software while ADCS is set at the same time, a new A/D conversion with the same channel number may be started.
But it is recommended to reset ADCI ***before*** ADCS is set.

ADCON.2	AADR2	Analogue input select: this binary coded address selects one of the eight analogue port bits of P5 to be input to the converter. It can only be changed when ADCI and ADCS are both LOW.
ADCON.1	AADR1	
ADCON.0	AADR0	

AADR2	AADR1	AADR0	Selected Analog Channel
0	0	0	ADC0 (P5.0)
0	0	1	ADC1 (P5.1)
0	1	0	ADC2 (P5.2)
0	1	1	ADC3 (P5.3)
1	0	0	ADC4 (P5.4)
1	0	1	ADC5 (P5.5)
1	1	0	ADC6 (P5.6)
1	1	1	ADC7 (P5.7)

SU00960

Figure 23. ADC Control Register (ADCON)

10-Bit ADC Resolution and Analog Supply: Figure 24 shows how the ADC is realized. The ADC has its own supply pins (AV_{DD} and AV_{SS}) and two pins (Vref+ and Vref–) connected to each end of the DAC's resistance-ladder. The ladder has 1023 equally spaced taps, separated by a resistance of "R". The first tap is located 0.5 x R above Vref–, and the last tap is located 1.5 x R below Vref+. This gives a total ladder resistance of 1024 x R. This structure ensures that the DAC is monotonic and results in a symmetrical quantization error as shown in Figure 26.

For input voltages between Vref– and (Vref–) + 1/2 LSB, the 10-bit result of an A/D conversion will be 00 0000 0000B = 000H. For input voltages between (Vref+) – 3/2 LSB and Vref+, the result of a conversion will be 11 1111 1111B = 3FFH. AVref+ and AVref– may be between AV_{DD} + 0.2 V and AV_{SS} – 0.2 V. AVref+ should be positive with respect to AVref–, and the input voltage (Vin) should be between AVref+ and AVref–. If the analog input voltage range is from 2 V to 4 V, then 10-bit resolution can be obtained over this range if AVref+ = 4V and AVref– = 2 V.

The result can always be calculated from the following formula:

$$\text{Result} = 1024 \times \frac{V_{IN} - AV_{ref-}}{AV_{ref+} - AV_{ref-}}$$

Power Reduction Modes

The P87C554 has two reduced power modes of operation: the idle mode and the power-down mode. These modes are entered by setting bits in the PCON special function register. When the P87C554 enters the idle mode, the following functions are disabled:

CPU	(halted)
Timer T2	(halted and reset)
PWM0, PWM1	(reset; outputs are high)
ADC	(may be enabled for operation in Idle mode by setting bit AIDC (AUXR1.6)).

In idle mode, the following functions remain active:

Timer 0
Timer 1
Timer T3
SIO0 SIO1
External interrupts

When the P87C554 enters the power-down mode, the oscillator is stopped. The power-down mode is entered by setting the PD bit in the PCON register. The PD bit can only be set if the $\overline{EW}$ input is tied HIGH.

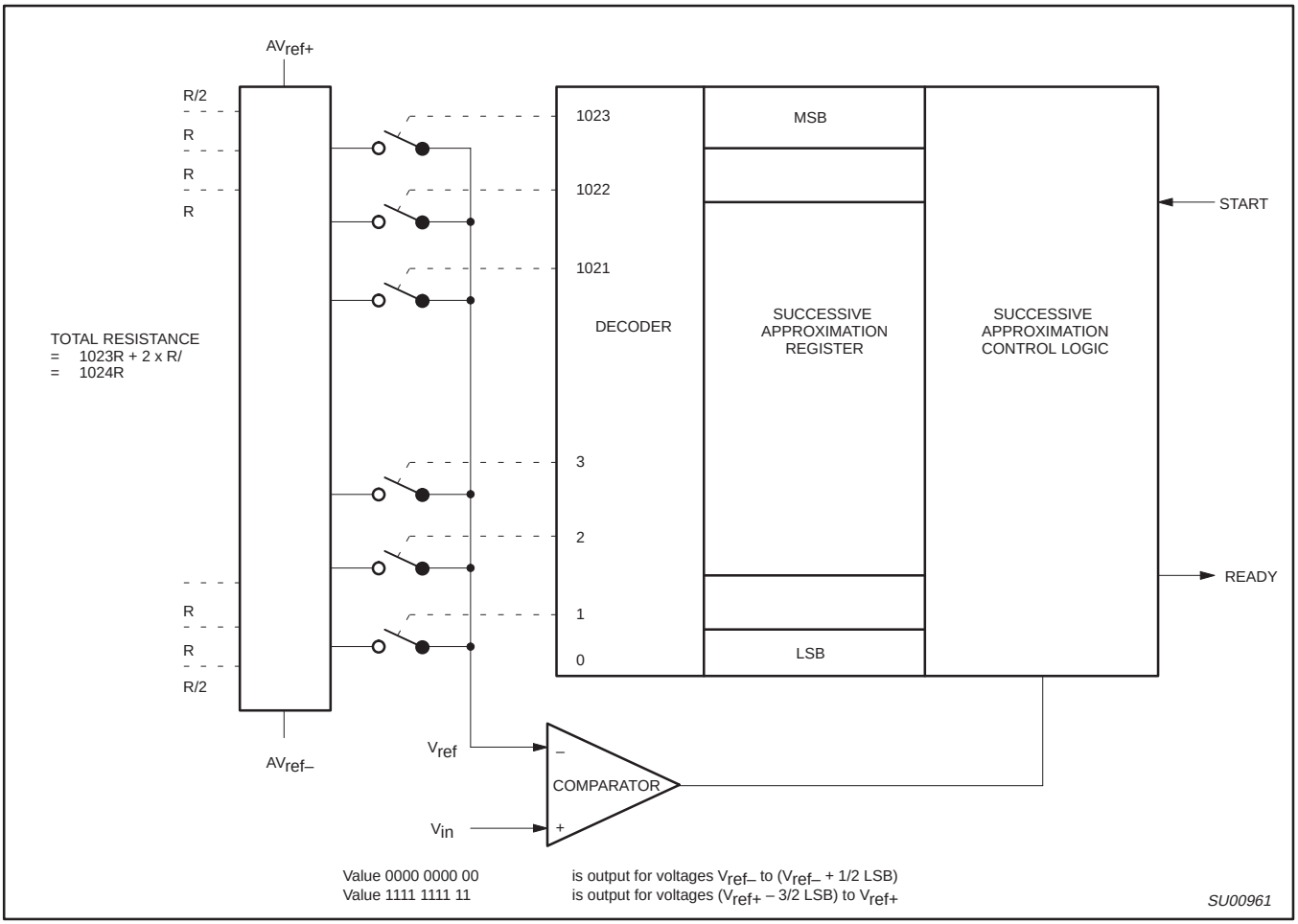

Figure 24. ADC Realization

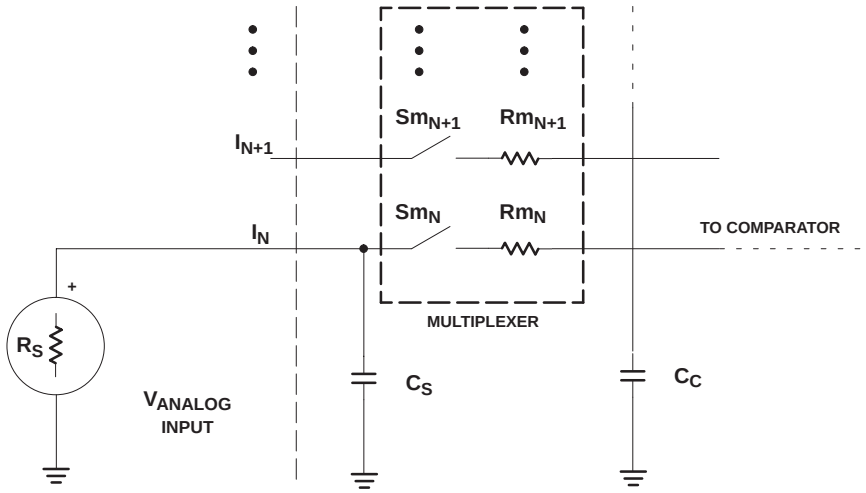

Rm = 0.5 - 3 kΩ
$C_S + C_C$ = 15 pF maximum
R_S = Recommended < 9.6 kΩ for 1 LSB @ 12 MHz

NOTE:
Because the analog to digital converter has a sampled-data comparator, the input looks capacitive to a source. When a conversion is initiated, switch Sm closes for $8t_{CY}$ (8 µs @ 12 MHz crystal frequency) during which time capacitance $C_S + C_C$ is charged. It should be noted that the sampling causes the analog input to present a varying load to an analog source.

SU00962

Figure 25. A/D Input: Equivalent Circuit

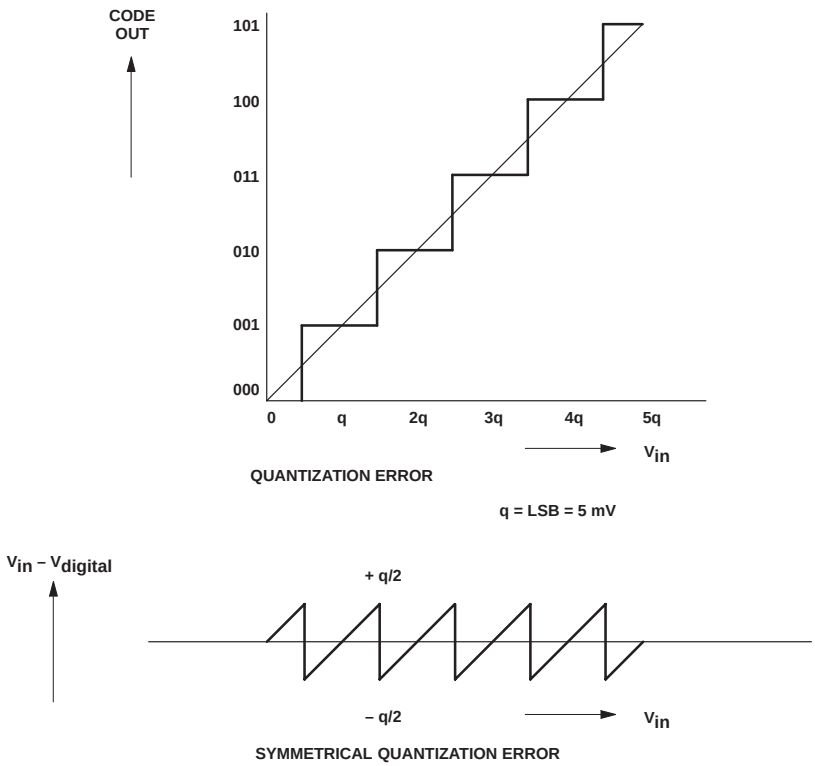

SU00963

Figure 26. Effective Conversion Characteristic

Interrupts

The P87C554 has fifteen interrupt sources, each of which can be assigned one of four priority levels. The five interrupt sources common to the 80C51 are the external interrupts ($\overline{INT0}$ and $\overline{INT1}$), the timer 0 and timer 1 interrupts (IT0 and IT1), and the serial I/O interrupt (RI or TI). In the P87C554, the standard serial interrupt is called SIO0.

The eight Timer T2 interrupts are generated by flags CTI0-CT13, CMI0-CMI2, and by the logical OR of flags T2OV and T2BO. Flags CTI0 to CT13 are set by input signals CT0I to CT3i. Flags CMI0 to CMI2 are set when a match occurs between Timer T2 and the compare registers CM0, CM1, and CM2. When an 8-bit or 16-bit overflow occurs, flags T2BO and T2OV are set, respectively. These nine flags are not cleared by hardware and must be reset by software to avoid recurring interrupts.

The ADC interrupt is generated by the ADCI flag in the ADC control register (ADCON). This flag is set when an ADC conversion result is ready to be read. ADCI is not cleared by hardware and must be reset by software to avoid recurring interrupts.

The SIO1 (I^{2}C) interrupt is generated by the SI flag in the SIO1 control register (S1CON). This flag is set when S1STA is loaded with a valid status code.

The ADCI flag may be reset by software. It cannot be set by software. All other flags that generate interrupts may be set or cleared by software, and the effect is the same as setting or resetting the flags by hardware. Thus, interrupts may be generated by software and pending interrupts can be canceled by software.

Interrupt Enable Registers: Each interrupt source can be individually enabled or disabled by setting or clearing a bit in the interrupt enable special function registers IEN0 and IEN1. All interrupt sources can also be globally enabled or disabled by setting or clearing bit EA in IEN0. The interrupt enable registers are described in Figures 27 and 28.

There are 3 SFRs associated with each of the four-level interrupts. They are the IENx, IPx, and IPxH. (See Figures 29, 30, and 31.) The IPxH (Interrupt Priority High) register makes the four-level interrupt structure possible.

The function of the IPxH SFR is simple and when combined with the IPx SFR determines the priority of each interrupt. The priority of each interrupt is determined as shown in the following table:

PRIORITY BITS		INTERRUPT PRIORITY LEVEL
IPxH.x	IPx.x	
0	0	Level 0 (lowest priority)
0	1	Level 1
1	0	Level 2
1	1	Level 3 (highest priority)

The priority scheme for servicing the interrupts is the same as that for the 80C51, except there are four interrupt levels rather than two as on the 80C51. An interrupt will be serviced as long as an interrupt of equal or higher priority is not already being serviced. If an interrupt of equal or higher level priority is being serviced, the new interrupt will wait until it is finished before being serviced. If a lower priority level interrupt is being serviced, it will be stopped and the new interrupt serviced. When the new interrupt is finished, the lower priority level interrupt that was stopped will be completed.

	7	6	5	4	3	2	1	0
IEN0 (A8H)	EA	EAD	ES1	ES0	ET1	EX1	ET0	EX0
	(MSB)							(LSB)

BIT	SYMBOL	FUNCTION
IEN0.7	EA	Global enable/disable control 0 = No interrupt is enabled 1 = Any individually enabled interrupt will be accepted
IEN0.6	EAD	Eanble ADC interrupt
IEN0.5	ES1	Enable SIO1 (I^{2}C) interrupt
IEN0.4	ES0	Enable SIO0 (UART) interrupt
IEN0.3	ET1	Enable Timer 1 interrupt
IEN0.2	EX1	Enable External interrupt 1
IEN0.1	ET0	Enable Timer 0 interrupt
IEN0.0	EX0	Enable External interrupt 0

SU00762

Figure 27. Interrupt Enable Register (IEN0)

	7	6	5	4	3	2	1	0
IEN1 (E8H)	ET2	ECM2	ECM1	ECM0	ECT3	ECT2	ECT1	ECT0
	(MSB)							(LSB)

BIT	SYMBOL	FUNCTION
IEN1.7	ET2	Enable Timer T2 overflow interrupt(s)
IEN1.6	ECM2	Enable T2 Comparator 2 interrupt
IEN1.5	ECM1	Enable T2 Comparator 1 interrupt
IEN1.4	ECM0	Enable T2 Comparator 0 interrupt
IEN1.3	ECT3	Enable T2 Capture register 3 interrupt
IEN1.2	ECT2	Enable T2 Capture register 2 interrupt
IEN1.1	ECT1	Enable T2 Capture register 1 interrupt
IEN1.0	ECT0	Enable T2 Capture register 0 interrupt

SU00755

In all cases, if the enable bit is 0, then the interrupt is disabled, and if the enable bit is 1, then the interrupt is enabled.

Figure 28. Interrupt Enable Register (IEN1)

	7	6	5	4	3	2	1	0
IP0 (B8H)	–	PAD	PS1	PS0	PT1	PX1	PT0	PX0
	(MSB)							(LSB)

BIT	SYMBOL	FUNCTION
IP0.7	–	Unused
IP0.6	PAD	ADC interrupt priority level
IP0.5	PS1	SIO1 (I^{2}C) interrupt priority level
IP0.4	PS0	SIO0 (UART) interrupt priority level
IP0.3	PT1	Timer 1 interrupt priority level
IP0.2	PX1	External interrupt 1 priority level
IP0.1	PT0	Timer 0 interrupt priority level
IP0.0	PX0	External interrupt 0 priority level

SU00763

Figure 29. Interrupt Priority Register (IP0)

	7	6	5	4	3	2	1	0
IP0H (B7H)	–	PADH	PS1H	PS0H	PT1H	PX1H	PT0H	PX0H
	(MSB)							(LSB)

BIT	SYMBOL	FUNCTION
IP0H.7	–	Unused
IP0H.6	PADH	ADC interrupt priority level high
IP0H.5	PS1H	SIO1 (I^{2}C) interrupt priority level high
IP0H.4	PS0H	SIO0 (UART) interrupt priority level high
IP0H.3	PT1H	Timer 1 interrupt priority level high
IP0H.2	PX1H	External interrupt 1 priority level high
IP0H.1	PT0H	Timer 0 interrupt priority level high
IP0H.0	PX0H	External interrupt 0 priority level high

SU00983

Figure 30. Interrupt Priority Register High (IP0H)

	7	6	5	4	3	2	1	0
IP1 (F8H)	PT2	PCM2	PCM1	PCM0	PCT3	PCT2	PCT1	PCT0
	(MSB)							(LSB)

BIT	SYMBOL	FUNCTION
IP1.7	PT2	T2 overflow interrupt(s) priority level
IP1.6	PCM2	T2 comparator 2 interrupt priority level
IP1.5	PCM1	T2 comparator 1 interrupt priority level
IP1.4	PCM0	T2 comparator 0 interrupt priority level
IP1.3	PCT3	T2 capture register 3 interrupt priority level
IP1.2	PCT2	T2 capture register 2 interrupt priority level
IP1.1	PCT1	T2 capture register 1 interrupt priority level
IP1.0	PCT0	T2 capture register 0 interrupt priority level

SU00764

Figure 31. Interrupt Priority Register (IP1)

	7	6	5	4	3	2	1	0
IP1H (F7H)	PT2H	PCM2H	PCM1H	PCM0H	PCT3H	PCT2H	PCT1H	PCT0H
	(MSB)							(LSB)

BIT	SYMBOL	FUNCTION
IP1H.7	PT2H	T2 overflow interrupt(s) priority level high
IP1H.6	PCM2H	T2 comparator 2 interrupt priority level high
IP1H.5	PCM1H	T2 comparator 1 interrupt priority level high
IP1H.4	PCM0H	T2 comparator 0 interrupt priority level high
IP1H.3	PCT3H	T2 capture register 3 interrupt priority level high
IP1H.2	PCT2H	T2 capture register 2 interrupt priority level high
IP1H.1	PCT1H	T2 capture register 1 interrupt priority level high
IP1H.0	PCT0H	T2 capture register 0 interrupt priority level high

SU00984

Figure 32. Interrupt Priority Register High (IP1H)

Table 3. Interrupt Priority Structure

SOURCE	NAME	PRIORITY WITHIN LEVEL
		(highest)
External interrupt 0	X0	↑
SIO1 (I^{2}C)	S1	
ADC completion	ADC	
Timer 0 overflow	T0	
T2 capture 0	CT0	
T2 compare 0	CM0	
External interrupt 1	X1	
T2 capture 1	CT1	
T2 compare 1	CM1	
Timer 1 overflow	T1	
T2 capture 2	CT2	
T2 compare 2	CM2	
SIO0 (UART)	S0	
T2 capture 3	CT3	
Timer T2 overflow	T2	↓
		(lowest)

Table 4. Interrupt Vector Addresses

SOURCE	NAME	VECTOR ADDRESS
External interrupt 0	X0	0003H
Timer 0 overflow	T0	000BH
External interrupt 1	X1	0013H
Timer 1 overflow	T1	001BH
SIO0 (UART)	S0	0023H
SIO1 (I^{2}C)	S1	002BH
T2 capture 0	CT0	0033H
T2 capture 1	CT1	003BH
T2 capture 2	CT2	0043H
T2 capture 3	CT3	004BH
ADC completion	ADC	0053H
T2 compare 0	CM0	005BH
T2 compare 1	CM1	0063H
T2 compare 2	CM2	006BH
T2 overflow	T2	0073H

SIO1, I^{2}C Serial I/O: The I^{2}C bus uses two wires (SDA and SCL) to transfer information between devices connected to the bus. The main features of the bus are:

- Bidirectional data transfer between masters and slaves
- Multimaster bus (no central master)
- Arbitration between simultaneously transmitting masters without corruption of serial data on the bus
- Serial clock synchronization allows devices with different bit rates to communicate via one serial bus
- Serial clock synchronization can be used as a handshake mechanism to suspend and resume serial transfer
- The I^{2}C bus may be used for test and diagnostic purposes

The output latches of P1.6 and P1.7 must be set to logic 1 in order to enable SIO1.

The P87C554 on-chip I^{2}C logic provides a serial interface that meets the I^{2}C bus specification and supports all transfer modes (other than the low-speed mode) from and to the I^{2}C bus. The SIO1 logic handles bytes transfer autonomously. It also keeps track of serial transfers, and a status register (S1STA) reflects the status of SIO1 and the I^{2}C bus.

The CPU interfaces to the I^{2}C logic via the following four special function registers: S1CON (SIO1 control register), S1STA (SIO1 status register), S1DAT (SIO1 data register), and S1ADR (SIO1 slave address register). The SIO1 logic interfaces to the external I^{2}C bus via two port 1 pins: P1.6/SCL (serial clock line) and P1.7/SDA (serial data line).

A typical I^{2}C bus configuration is shown in Figure 33, and Figure 34 shows how a data transfer is accomplished on the bus. Depending on the state of the direction bit (R/W), two types of data transfers are possible on the I^{2}C bus:

1. Data transfer from a master transmitter to a slave receiver. The first byte transmitted by the master is the slave address. Next follows a number of data bytes. The slave returns an acknowledge bit after each received byte.
2. Data transfer from a slave transmitter to a master receiver. The first byte (the slave address) is transmitted by the master. The slave then returns an acknowledge bit. Next follows the data bytes transmitted by the slave to the master. The master returns an acknowledge bit after all received bytes other than the last byte. At the end of the last received byte, a “not acknowledge” is returned.

The master device generates all of the serial clock pulses and the START and STOP conditions. A transfer is ended with a STOP condition or with a repeated START condition. Since a repeated START condition is also the beginning of the next serial transfer, the I^{2}C bus will not be released.

Modes of Operation: The on-chip SIO1 logic may operate in the following four modes:

1. Master Transmitter Mode:

   Serial data output through P1.7/SDA while P1.6/SCL outputs the serial clock. The first byte transmitted contains the slave address of the receiving device (7 bits) and the data direction bit. In this case the data direction bit (R/$\overline{W}$) will be logic 0, and we say that a “W” is transmitted. Thus the first byte transmitted is SLA+W. Serial data is transmitted 8 bits at a time. After each byte is transmitted, an acknowledge bit is received. START and STOP conditions are output to indicate the beginning and the end of a serial transfer.

2. Master Receiver Mode:

   The first byte transmitted contains the slave address of the transmitting device (7 bits) and the data direction bit. In this case the data direction bit (R/$\overline{W}$) will be logic 1, and we say that an “R” is transmitted. Thus the first byte transmitted is SLA+R. Serial data is received via P1.7/SDA while P1.6/SCL outputs the serial clock. Serial data is received 8 bits at a time. After each byte is received, an acknowledge bit is transmitted. START and STOP conditions are output to indicate the beginning and end of a serial transfer.

3. Slave Receiver Mode:

   Serial data and the serial clock are received through P1.7/SDA and P1.6/SCL. After each byte is received, an acknowledge bit is transmitted. START and STOP conditions are recognized as the beginning and end of a serial transfer. Address recognition is performed by hardware after reception of the slave address and direction bit.

4. Slave Transmitter Mode:

   The first byte is received and handled as in the slave receiver mode. However, in this mode, the direction bit will indicate that the transfer direction is reversed. Serial data is transmitted via P1.7/SDA while the serial clock is input through P1.6/SCL. START and STOP conditions are recognized as the beginning and end of a serial transfer.

In a given application, SIO1 may operate as a master and as a slave. In the slave mode, the SIO1 hardware looks for its own slave address and the general call address. If one of these addresses is detected, an interrupt is requested. When the microcontroller wishes to become the bus master, the hardware waits until the bus is free before the master mode is entered so that a possible slave action is not interrupted. If bus arbitration is lost in the master mode, SIO1 switches to the slave mode immediately and can detect its own slave address in the same serial transfer.

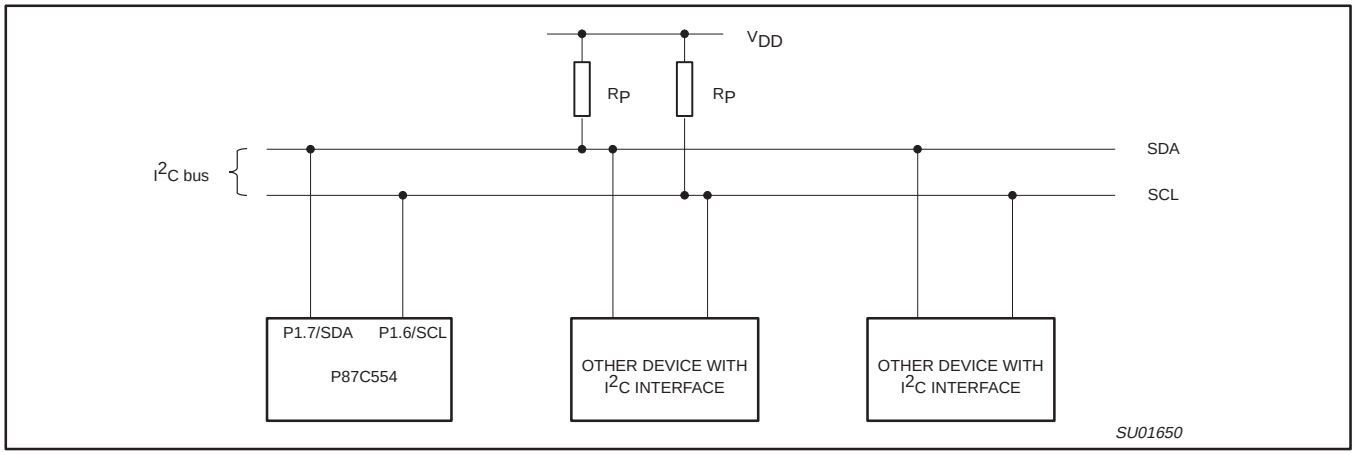

Figure 33. Typical I²C Bus Configuration

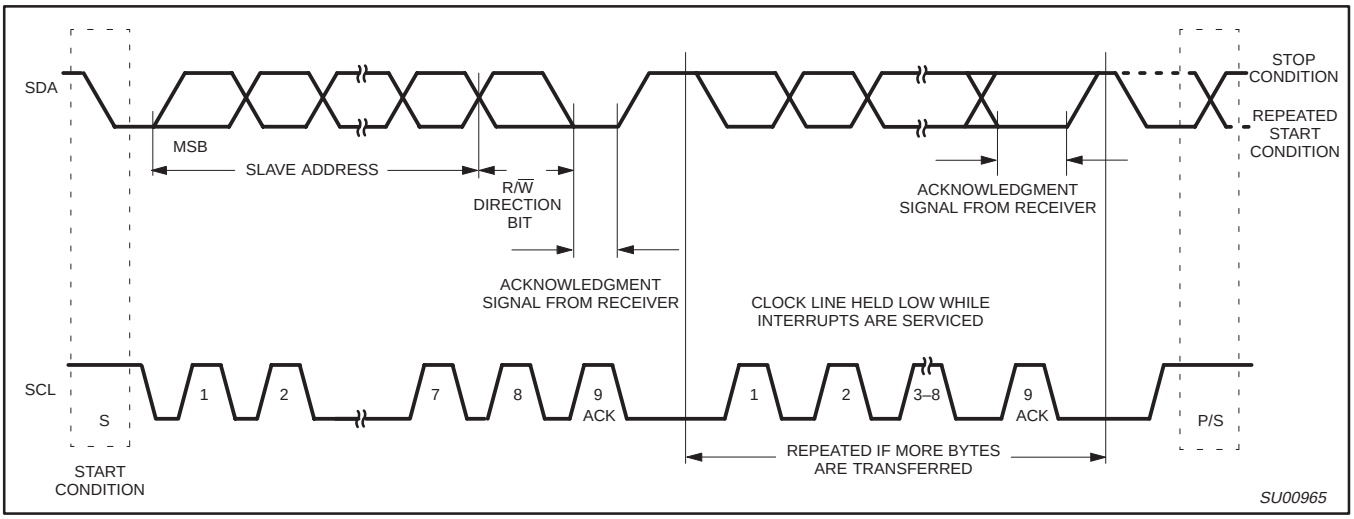

Figure 34. Data Transfer on the I²C Bus

SIO1 Implementation and Operation: Figure 35 shows how the on-chip I²C bus interface is implemented, and the following text describes the individual blocks.

INPUT FILTERS AND OUTPUT STAGES

The input filters have I²C compatible input levels. If the input voltage is less than 1.5 V, the input logic level is interpreted as 0; if the input voltage is greater than 3.0 V, the input logic level is interpreted as 1. Input signals are synchronized with the internal clock ($f_{OSC}/4$), and spikes shorter than three oscillator periods are filtered out.

The output stages consist of open drain transistors that can sink 3mA at V_{OUT} < 0.4 V. These open drain outputs do not have clamping diodes to V_{DD}. Thus, if the device is connected to the I²C bus and V_{DD} is switched off, the I²C bus is not affected.

ADDRESS REGISTER, S1ADR

This 8-bit special function register may be loaded with the 7-bit slave address (7 most significant bits) to which SIO1 will respond when programmed as a slave transmitter or receiver. The LSB (GC) is used to enable general call address (00H) recognition.

COMPARATOR

The comparator compares the received 7-bit slave address with its own slave address (7 most significant bits in S1ADR). It also compares the first received 8-bit byte with the general call address (00H). If an equality is found, the appropriate status bits are set and an interrupt is requested.

SHIFT REGISTER, S1DAT

This 8-bit special function register contains a byte of serial data to be transmitted or a byte which has just been received. Data in S1DAT is always shifted from right to left; the first bit to be transmitted is the MSB (bit 7) and, after a byte has been received, the first bit of received data is located at the MSB of S1DAT. While data is being shifted out, data on the bus is simultaneously being shifted in; S1DAT always contains the last byte present on the bus. Thus, in the event of lost arbitration, the transition from master transmitter to slave receiver is made with the correct data in S1DAT.

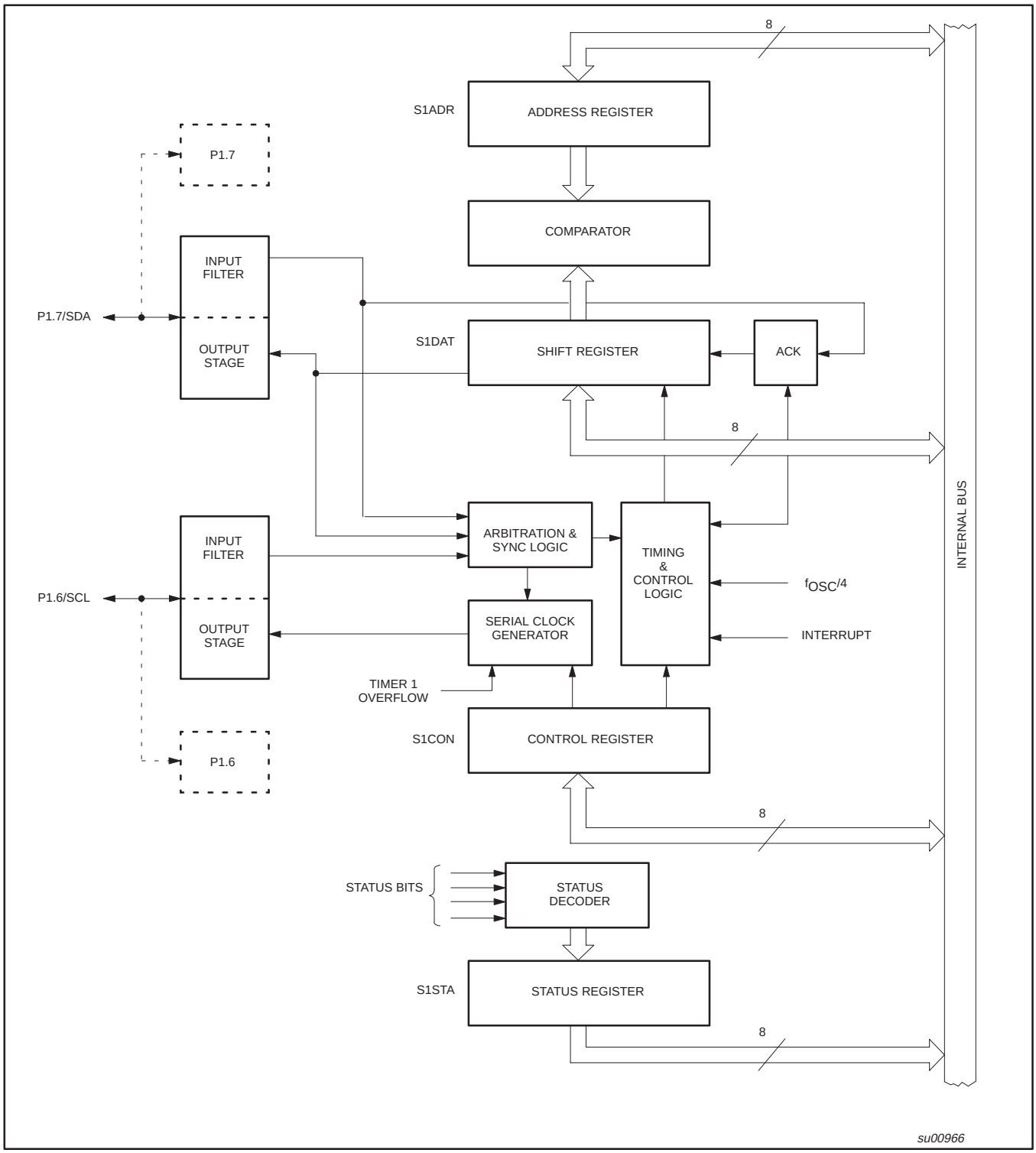

Figure 35. I2C Bus Serial Interface Block Diagram

Arbitration and Synchronization Logic

In the master transmitter mode, the arbitration logic checks that every transmitted logic 1 actually appears as a logic 1 on the I^{2}C bus. If another device on the bus overrules a logic 1 and pulls the SDA line low, arbitration is lost, and SIO1 immediately changes from master transmitter to slave receiver. SIO1 will continue to output clock pulses (on SCL) until transmission of the current serial byte is complete.

Arbitration may also be lost in the master receiver mode. Loss of arbitration in this mode can only occur while SIO1 is returning a “not acknowledge: (logic 1) to the bus. Arbitration is lost when another device on the bus pulls this signal LOW. Since this can occur only at the end of a serial byte, SIO1 generates no further clock pulses. Figure 36 shows the arbitration procedure.

The synchronization logic will synchronize the serial clock generator with the clock pulses on the SCL line from another device. If two or more master devices generate clock pulses, the “mark” duration is determined by the device that generates the shortest “marks,” and the “space” duration is determined by the device that generates the longest “spaces.” Figure 37 shows the synchronization procedure.

A slave may stretch the space duration to slow down the bus master. The space duration may also be stretched for handshaking purposes. This can be done after each bit or after a complete byte transfer. SIO1 will stretch the SCL space duration after a byte has been transmitted or received and the acknowledge bit has been transferred. The serial interrupt flag (SI) is set, and the stretching continues until the serial interrupt flag is cleared.

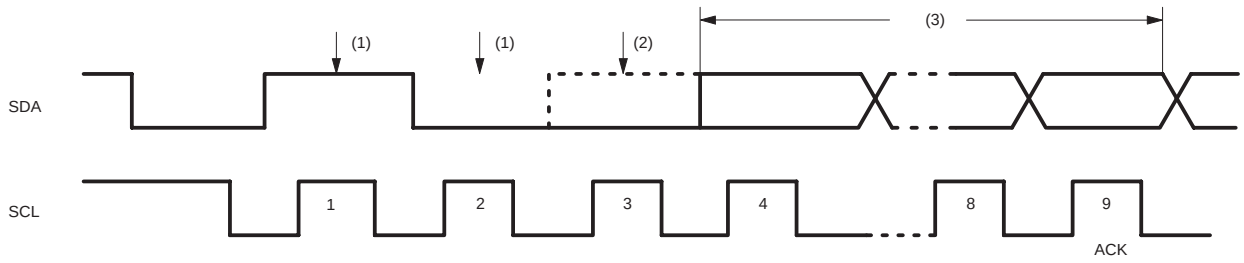

1. Another device transmits identical serial data.
2. Another device overrules a logic 1 (dotted line) transmitted by SIO1 (master) by pulling the SDA line low. Arbitration is lost, and SIO1 enters the slave receiver mode.
3. SIO1 is in the slave receiver mode but still generates clock pulses until the current byte has been transmitted. SIO1 will not generate clock pulses for the next byte. Data on SDA originates from the new master once it has won arbitration.

SU00967

Figure 36. Arbitration Procedure

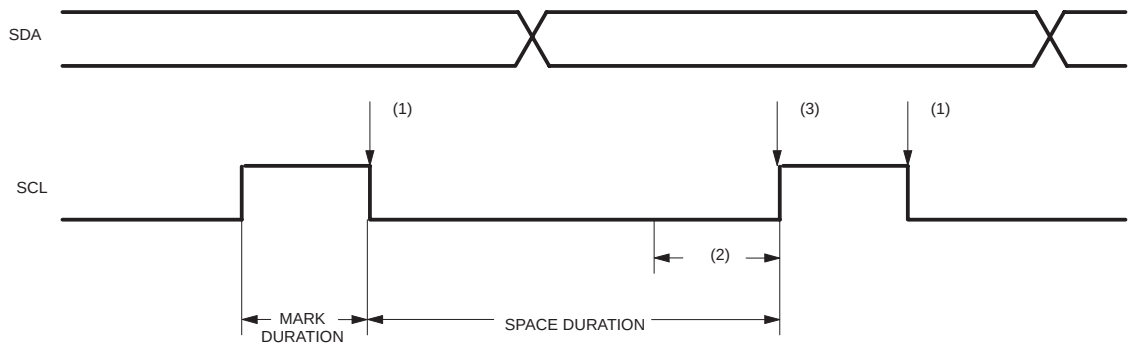

1. Another service pulls the SCL line low before the SIO1 “mark” duration is complete. The serial clock generator is immediately reset and commences with the “space” duration by pulling SCL low.
2. Another device still pulls the SCL line low after SIO1 releases SCL. The serial clock generator is forced into the wait state until the SCL line is released.
3. The SCL line is released, and the serial clock generator commences with the mark duration.

SU00968

Figure 37. Serial Clock Synchronization

Serial Clock Generator

This programmable clock pulse generator provides the SCL clock pulses when SIO1 is in the master transmitter or master receiver mode. It is switched off when SIO1 is in a slave mode. The programmable output clock frequencies are: $f_{OSC}/120$, $f_{OSC}/9600$, and the Timer 1 overflow rate divided by eight. The output clock pulses have a 50% duty cycle unless the clock generator is synchronized with other SCL clock sources as described above.

Timing and Control

The timing and control logic generates the timing and control signals for serial byte handling. This logic block provides the shift pulses for S1DAT, enables the comparator, generates and detects start and stop conditions, receives and transmits acknowledge bits, controls the master and slave modes, contains interrupt request logic, and monitors the I^{2}C bus status.

Control Register, S1CON

This 7-bit special function register is used by the microcontroller to control the following SIO1 functions: start and restart of a serial transfer, termination of a serial transfer, bit rate, address recognition, and acknowledgment.

Status Decoder and Status Register

The status decoder takes all of the internal status bits and compresses them into a 5-bit code. This code is unique for each I^{2}C bus status. The 5-bit code may be used to generate vector addresses for fast processing of the various service routines. Each service routine processes a particular bus status. There are 26 possible bus states if all four modes of SIO1 are used. The 5-bit status code is latched into the five most significant bits of the status register when the serial interrupt flag is set (by hardware) and remains stable until the interrupt flag is cleared by software. The three least significant bits of the status register are always zero. If the status code is used as a vector to service routines, then the routines are displaced by eight address locations. Eight bytes of code is sufficient for most of the service routines (see the software example in this section).

The Four SIO1 Special Function Registers: The microcontroller interfaces to SIO1 via four special function registers. These four SFRs (S1ADR, S1DAT, S1CON, and S1STA) are described individually in the following sections.

The Address Register, S1ADR: The CPU can read from and write to this 8-bit, directly addressable SFR. S1ADR is not affected by the SIO1 hardware. The contents of this register are irrelevant when SIO1 is in a master mode. In the slave modes, the seven most significant bits must be loaded with the microcontroller's own slave address, and, if the least significant bit is set, the general call address (00H) is recognized; otherwise it is ignored.

	7	6	5	4	3	2	1	0
S1ADR (DBH)	X	X	X	X	X	X	X	GC
	own slave address							

The most significant bit corresponds to the first bit received from the I^{2}C bus after a start condition. A logic 1 in S1ADR corresponds to a high level on the I^{2}C bus, and a logic 0 corresponds to a low level on the bus.

The Data Register, S1DAT: S1DAT contains a byte of serial data to be transmitted or a byte which has just been received. The CPU can read from and write to this 8-bit, directly addressable SFR while it is not in the process of shifting a byte. This occurs when SIO1 is in a defined state and the serial interrupt flag is set. Data in S1DAT remains stable as long as SI is set. Data in S1DAT is always shifted from right to left: the first bit to be transmitted is the MSB (bit 7), and, after a byte has been received, the first bit of received data is located at the MSB of S1DAT. While data is being shifted out, data on the bus is simultaneously being shifted in; S1DAT always contains the last data byte present on the bus. Thus, in the event of lost arbitration, the transition from master transmitter to slave receiver is made with the correct data in S1DAT.

	7	6	5	4	3	2	1	0
S1DAT (DAH)	SD7	SD6	SD5	SD4	SD3	SD2	SD1	SD0
	← shift direction							

SD7 - SD0:

Eight bits to be transmitted or just received. A logic 1 in S1DAT corresponds to a high level on the I^{2}C bus, and a logic 0 corresponds to a low level on the bus. Serial data shifts through S1DAT from right to left. Figure 38 shows how data in S1DAT is serially transferred to and from the SDA line.

S1DAT and the ACK flag form a 9-bit shift register which shifts in or shifts out an 8-bit byte, followed by an acknowledge bit. The ACK flag is controlled by the SIO1 hardware and cannot be accessed by the CPU. Serial data is shifted through the ACK flag into S1DAT on the rising edges of serial clock pulses on the SCL line. When a byte has been shifted into S1DAT, the serial data is available in S1DAT, and the acknowledge bit is returned by the control logic during the ninth clock pulse. Serial data is shifted out from S1DAT via a buffer (BSD7) on the falling edges of clock pulses on the SCL line.

When the CPU writes to S1DAT, BSD7 is loaded with the content of S1DAT.7, which is the first bit to be transmitted to the SDA line (see Figure 39). After nine serial clock pulses, the eight bits in S1DAT will have been transmitted to the SDA line, and the acknowledge bit will be present in ACK. Note that the eight transmitted bits are shifted back into S1DAT.

The Control Register, S1CON: The CPU can read from and write to this 8-bit, directly addressable SFR. Two bits are affected by the SIO1 hardware: the SI bit is set when a serial interrupt is requested, and the STO bit is cleared when a STOP condition is present on the I^{2}C bus. The STO bit is also cleared when ENS1 = "0".

	7	6	5	4	3	2	1	0
S1CON (D8H)	CR2	ENS1	STA	STO	SI	AA	CR1	CR0

ENS1, the SIO1 Enable Bit

ENS1 = "0": When ENS1 is "0", the SDA and SCL outputs are in a high impedance state. SDA and SCL input signals are ignored, SIO1 is in the "not addressed" slave state, and the STO bit in S1CON is forced to "0". No other bits are affected. P1.6 and P1.7 may be used as open drain I/O ports.

ENS1 = "1": When ENS1 is "1", SIO1 is enabled. The P1.6 and P1.7 port latches must be set to logic 1.

ENS1 should not be used to temporarily release SIO1 from the I2C bus since, when ENS1 is reset, the I2C bus status is lost. The AA flag should be used instead (see description of the AA flag in the following text).

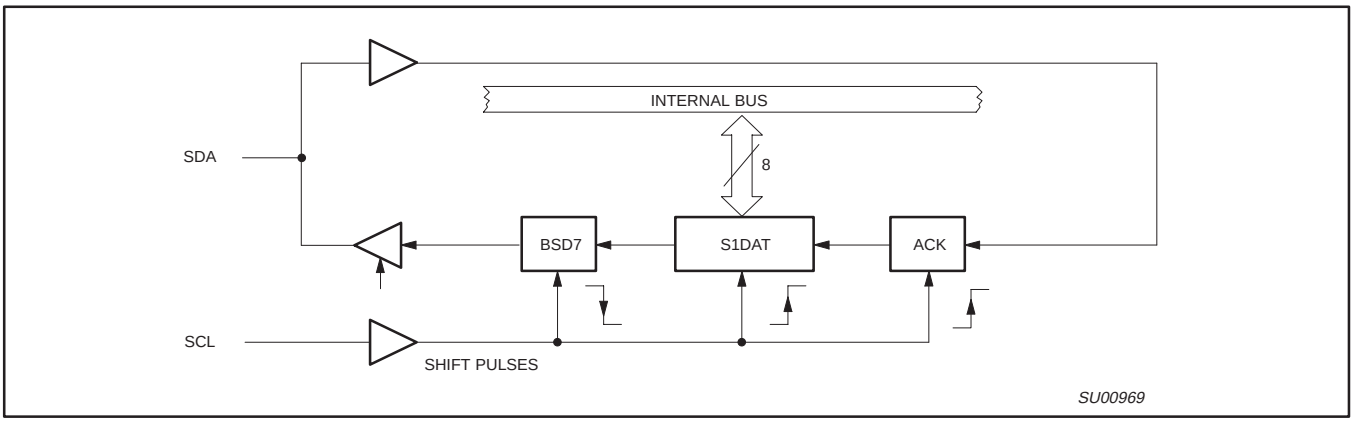

Figure 38. Serial Input/Output Configuration

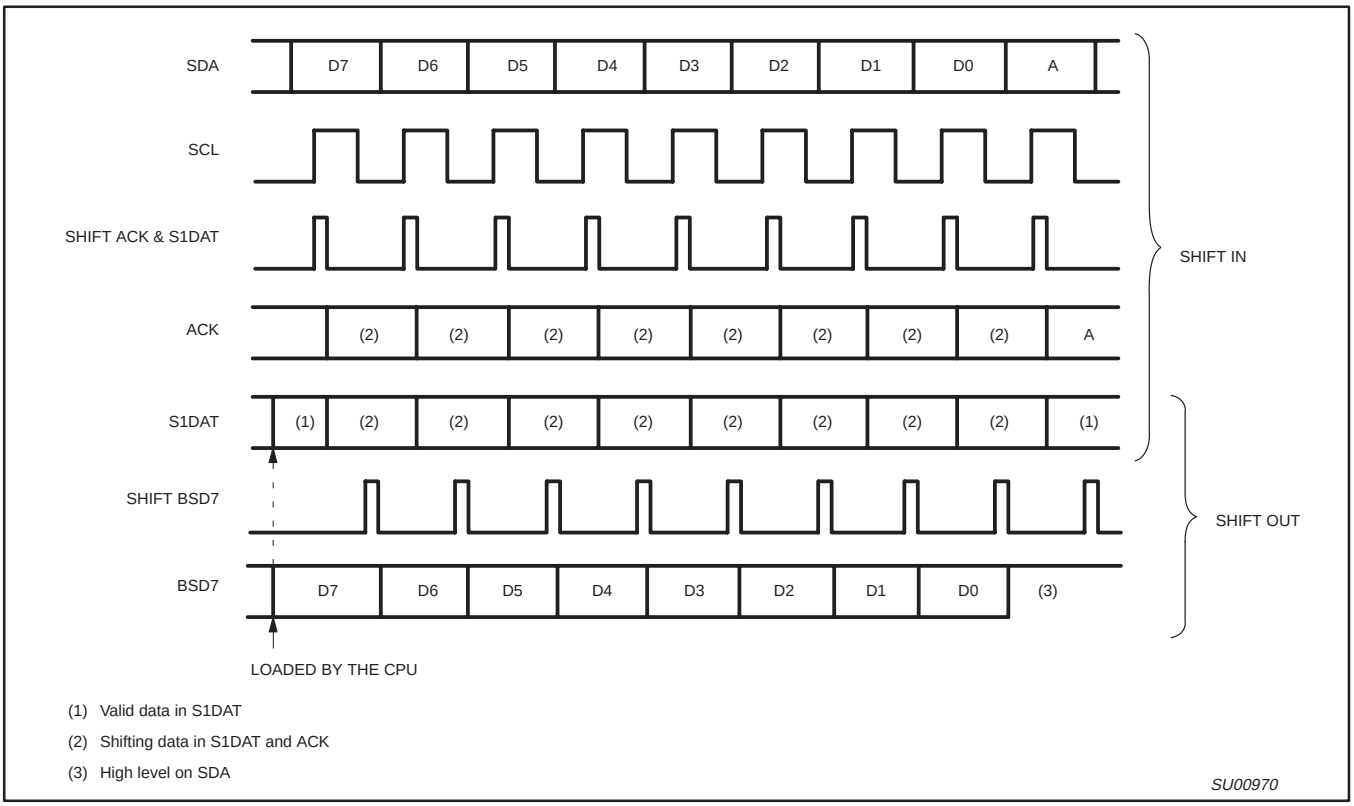

Figure 39. Shift-in and Shift-out Timing

In the following text, it is assumed that ENS1 = “1”.

STA, THE START FLAG

STA = “1”: When the STA bit is set to enter a master mode, the SIO1 hardware checks the status of the I2C bus and generates a START condition if the bus is free. If the bus is not free, then SIO1 waits for a STOP condition (which will free the bus) and generates a START condition after a delay of a half clock period of the internal serial clock generator.

If STA is set while SIO1 is already in a master mode and one or more bytes are transmitted or received, SIO1 transmits a repeated START condition. STA may be set at any time. STA may also be set when SIO1 is an addressed slave.

STA = “0”: When the STA bit is reset, no START condition or repeated START condition will be generated.

STO, THE STOP FLAG

STO = “1”: When the STO bit is set while SIO1 is in a master mode, a STOP condition is transmitted to the I2C bus. When the STOP condition is detected on the bus, the SIO1 hardware clears the STO flag. In a slave mode, the STO flag may be set to recover from an error condition. In this case, no STOP condition is transmitted to the I2C bus. However, the SIO1 hardware behaves as if a STOP condition has been received and switches to the defined “not addressed” slave receiver mode. The STO flag is automatically cleared by hardware.

If the STA and STO bits are both set, the a STOP condition is transmitted to the I²C bus if SIO1 is in a master mode (in a slave mode, SIO1 generates an internal STOP condition which is not transmitted). SIO1 then transmits a START condition.

STO = “0”: When the STO bit is reset, no STOP condition will be generated.

SI, THE SERIAL INTERRUPT FLAG

SI = “1”: When the SI flag is set, then, if the EA and ES1 (interrupt enable register) bits are also set, a serial interrupt is requested. SI is set by hardware when one of 25 of the 26 possible SIO1 states is entered. The only state that does not cause SI to be set is state F8H, which indicates that no relevant state information is available.

While SI is set, the low period of the serial clock on the SCL line is stretched, and the serial transfer is suspended. A high level on the SCL line is unaffected by the serial interrupt flag. SI must be reset by software.

SI = “0”: When the SI flag is reset, no serial interrupt is requested, and there is no stretching of the serial clock on the SCL line.

AA, THE ASSERT ACKNOWLEDGE FLAG

AA = “1”: If the AA flag is set, an acknowledge (low level to SDA) will be returned during the acknowledge clock pulse on the SCL line when:

– The “own slave address” has been received
– The general call address has been received while the general call bit (GC) in S1ADR is set
– A data byte has been received while SIO1 is in the master receiver mode
– A data byte has been received while SIO1 is in the addressed slave receiver mode

AA = “0”: if the AA flag is reset, a not acknowledge (high level to SDA) will be returned during the acknowledge clock pulse on SCL when:

– A data has been received while SIO1 is in the master receiver mode
– A data byte has been received while SIO1 is in the addressed slave receiver mode

When SIO1 is in the addressed slave transmitter mode, state C8H will be entered after the last serial is transmitted (see Figure 43). When SI is cleared, SIO1 leaves state C8H, enters the not addressed slave receiver mode, and the SDA line remains at a high level. In state C8H, the AA flag can be set again for future address recognition.

When SIO1 is in the not addressed slave mode, its own slave address and the general call address are ignored. Consequently, no acknowledge is returned, and a serial interrupt is not requested. Thus, SIO1 can be temporarily released from the I²C bus while the bus status is monitored. While SIO1 is released from the bus, START and STOP conditions are detected, and serial data is shifted in. Address recognition can be resumed at any time by setting the AA flag. If the AA flag is set when the part’s own slave address or the general call address has been partly received, the address will be recognized at the end of the byte transmission.

CR0, CR1, AND CR2, THE CLOCK RATE BITS

These three bits determine the serial clock frequency when SIO1 is in a master mode. The various serial rates are shown in Table 5.

A 12.5kHz bit rate may be used by devices that interface to the I²C bus via standard I/O port lines which are software driven and slow. 100kHz is usually the maximum bit rate and can be derived from a 16 MHz, 12 MHz, or a 6 MHz oscillator. A variable bit rate (0.5kHz to 62.5kHz) may also be used if Timer 1 is not required for any other purpose while SIO1 is in a master mode.

The frequencies shown in Table 5 are unimportant when SIO1 is in a slave mode. In the slave modes, SIO1 will automatically synchronize with any clock frequency up to 100kHz.

The Status Register, S1STA: S1STA is an 8-bit read-only special function register. The three least significant bits are always zero. The five most significant bits contain the status code. There are 26 possible status codes. When S1STA contains F8H, no relevant state information is available and no serial interrupt is requested. All other S1STA values correspond to defined SIO1 states. When each of these states is entered, a serial interrupt is requested (SI = “1”). A valid status code is present in S1STA one machine cycle after SI is set by hardware and is still present one machine cycle after SI has been reset by software.

Table 5. Serial Clock Rates

CR2	CR1	CR0	BIT FREQUENCY (kHz) AT f_{OSC}					f_{OSC} DIVIDED BY
			6 MHz	12 MHz	16 MHz	24 MHz[2]	30 MHz[2]	
0	0	0	23	47	62.5	94	117[1]	256
0	0	1	27	54	71	107[1]	134[1]	224
0	1	0	31	63	83.3	125[1]	156[1]	192
0	1	1	37	75	100	150[1]	188[1]	160
1	0	0	6.25	12.5	17	25	31	960
1	0	1	50	100	133[1]	200[1]	250[1]	120
1	1	0	100	200	267[1]	400[1]	500[1]	60
1	1	1	0.24 < 62.5 0 < 255	0.49 < 62.5 0 < 254	0.65 < 55.6 0 < 253	0.98 < 50.0 0 < 251	1.22 < 52.1 0 < 250	96 × (256 – (reload value Timer 1)) Reload value Timer 1 in Mode 2.

NOTES:
1. These frequencies exceed the upper limit of 100kHz of the I²C-bus specification and cannot be used in an I²C-bus application.
2. At f_{OSC} = 24 MHz/30 MHz the maximum I²C bus rate of 100kHz cannot be realized due to the fixed divider rates.

More Information on SIO1 Operating Modes: The four operating modes are:

– Master Transmitter
– Master Receiver
– Slave Receiver
– Slave Transmitter

Data transfers in each mode of operation are shown in Figures 40–43. These figures contain the following abbreviations:

Abbreviation	Explanation
S	Start condition
SLA	7-bit slave address
R	Read bit (high level at SDA)
W	Write bit (low level at SDA)
A	Acknowledge bit (low level at SDA)
$\overline{A}$	Not acknowledge bit (high level at SDA)
Data	8-bit data byte
P	Stop condition

In Figures 40-43, circles are used to indicate when the serial interrupt flag is set. The numbers in the circles show the status code held in the S1STA register. At these points, a service routine must be executed to continue or complete the serial transfer. These service routines are not critical since the serial transfer is suspended until the serial interrupt flag is cleared by software.

When a serial interrupt routine is entered, the status code in S1STA is used to branch to the appropriate service routine. For each status code, the required software action and details of the following serial transfer are given in Tables 6-10.

Master Transmitter Mode: In the master transmitter mode, a number of data bytes are transmitted to a slave receiver (see Figure 40). Before the master transmitter mode can be entered, S1CON must be initialized as follows:

	7	6	5	4	3	2	1	0
S1CON (D8H)	CR2	ENS1	STA	STO	SI	AA	CR1	CR0
	bit rate	1	0	0	0	X	bit rate	

CR0, CR1, and CR2 define the serial bit rate. ENS1 must be set to logic 1 to enable SIO1. If the AA bit is reset, SIO1 will not acknowledge its own slave address or the general call address in the event of another device becoming master of the bus. In other words, if AA is reset, SIO0 cannot enter a slave mode. STA, STO, and SI must be reset.

The master transmitter mode may now be entered by setting the STA bit using the SETB instruction. The SIO1 logic will now test the I^{2}C bus and generate a start condition as soon as the bus becomes free. When a START condition is transmitted, the serial interrupt flag (SI) is set, and the status code in the status register (S1STA) will be 08H. This status code must be used to vector to an interrupt service routine that loads S1DAT with the slave address and the data direction bit (SLA+W). The SI bit in S1CON must then be reset before the serial transfer can continue.

When the slave address and the direction bit have been transmitted and an acknowledgment bit has been received, the serial interrupt flag (SI) is set again, and a number of status codes in S1STA are possible. There are 18H, 20H, or 38H for the master mode and also 68H, 78H, or B0H if the slave mode was enabled (AA = logic 1). The appropriate action to be taken for each of these status codes is detailed in Table 6. After a repeated start condition (state 10H). SIO1 may switch to the master receiver mode by loading S1DAT with SLA+R).

Master Receiver Mode: In the master receiver mode, a number of data bytes are received from a slave transmitter (see Figure 41). The transfer is initialized as in the master transmitter mode. When the start condition has been transmitted, the interrupt service routine must load S1DAT with the 7-bit slave address and the data direction bit (SLA+R). The SI bit in S1CON must then be cleared before the serial transfer can continue.

When the slave address and the data direction bit have been transmitted and an acknowledgment bit has been received, the serial interrupt flag (SI) is set again, and a number of status codes in S1STA are possible. These are 40H, 48H, or 38H for the master mode and also 68H, 78H, or B0H if the slave mode was enabled (AA = logic 1). The appropriate action to be taken for each of these status codes is detailed in Table 7. ENS1, CR1, and CR0 are not affected by the serial transfer and are not referred to in Table 7. After a repeated start condition (state 10H), SIO1 may switch to the master transmitter mode by loading S1DAT with SLA+W.

Slave Receiver Mode: In the slave receiver mode, a number of data bytes are received from a master transmitter (see Figure 42). To initiate the slave receiver mode, S1ADR and S1CON must be loaded as follows:

	7	6	5	4	3	2	1	0
S1ADR (DBH)	X	X	X	X	X	X	X	GC
	own slave address							

The upper 7 bits are the address to which SIO1 will respond when addressed by a master. If the LSB (GC) is set, SIO1 will respond to the general call address (00H); otherwise it ignores the general call address.

	7	6	5	4	3	2	1	0
S1CON (D8H)	CR2	ENS1	STA	STO	SI	AA	CR1	CR0
	X	1	0	0	0	1	X	X

CR0, CR1, and CR2 do not affect SIO1 in the slave mode. ENS1 must be set to logic 1 to enable SIO1. The AA bit must be set to enable SIO1 to acknowledge its own slave address or the general call address. STA, STO, and SI must be reset.

When S1ADR and S1CON have been initialized, SIO1 waits until it is addressed by its own slave address followed by the data direction bit which must be “0” (W) for SIO1 to operate in the slave receiver mode. After its own slave address and the W bit have been received, the serial interrupt flag (I) is set and a valid status code can be read from S1STA. This status code is used to vector to an interrupt service routine, and the appropriate action to be taken for each of these status codes is detailed in Table 8. The slave receiver mode may also be entered if arbitration is lost while SIO1 is in the master mode (see status 68H and 78H).

If the AA bit is reset during a transfer, SIO1 will return a not acknowledge (logic 1) to SDA after the next received data byte. While AA is reset, SIO1 does not respond to its own slave address or a general call address. However, the I^{2}C bus is still monitored and address recognition may be resumed at any time by setting AA. This means that the AA bit may be used to temporarily isolate SIO1 from the I^{2}C bus.

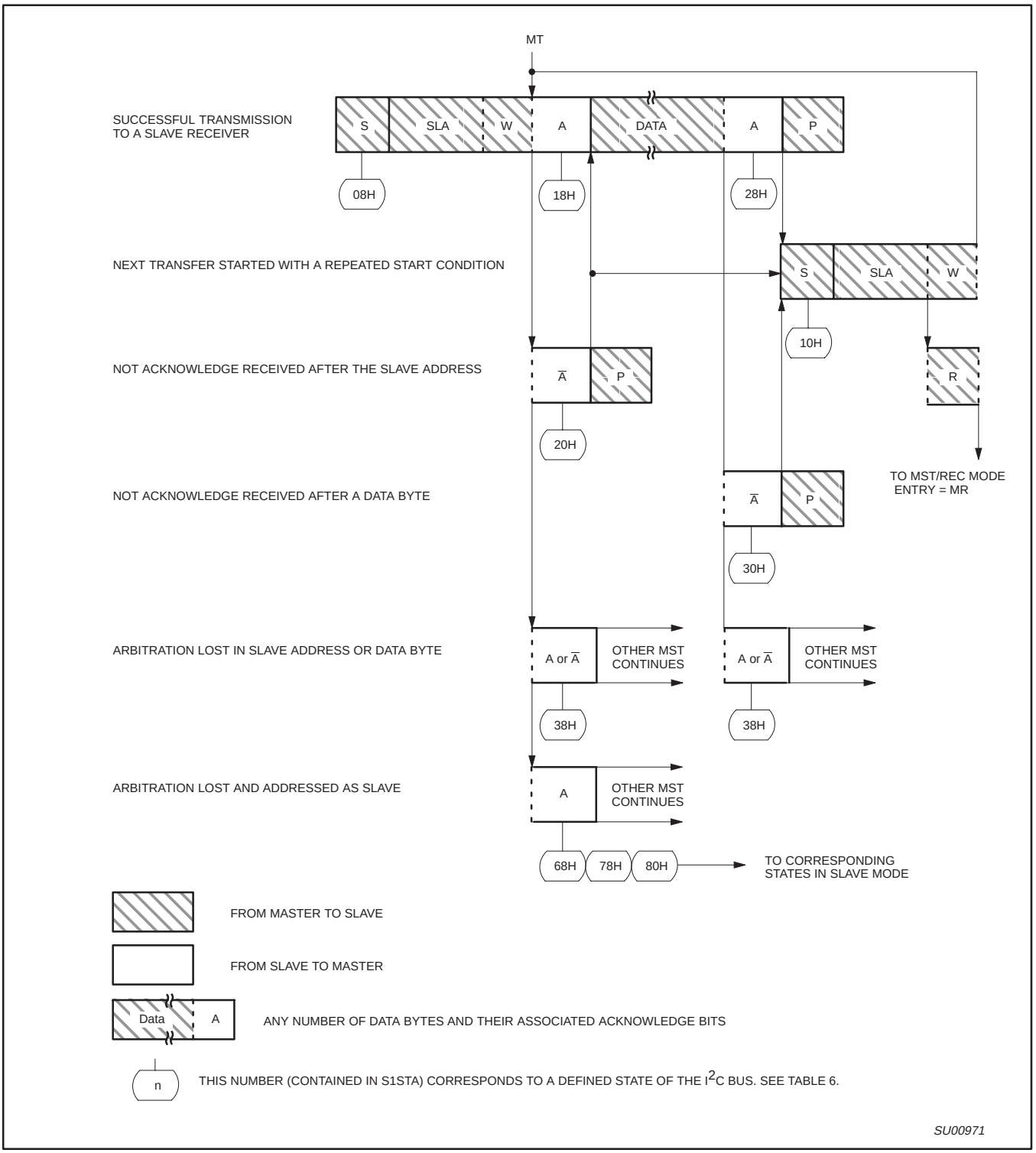

Figure 40. Format and States in the Master Transmitter Mode

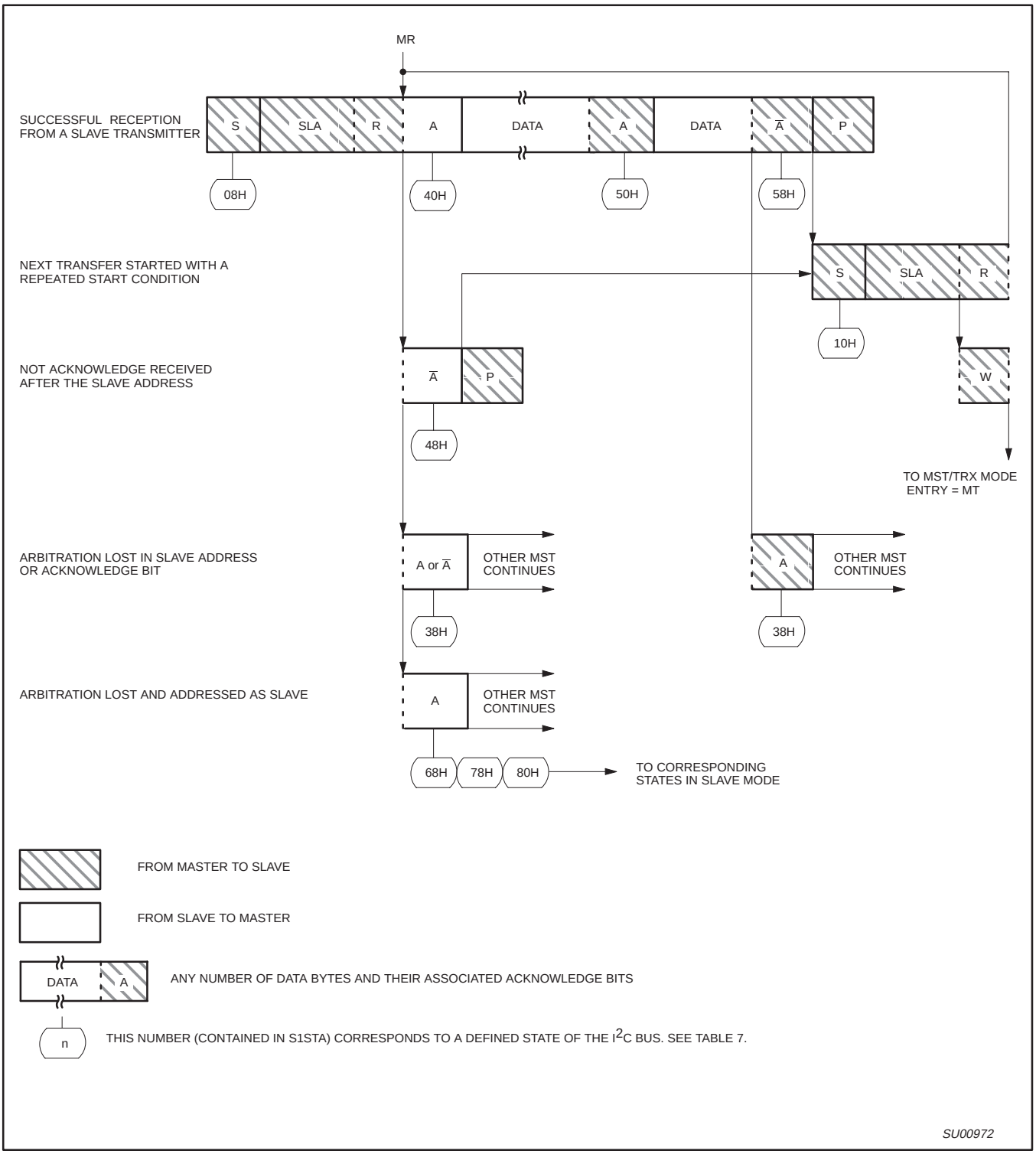

Figure 41. Format and States in the Master Receiver Mode

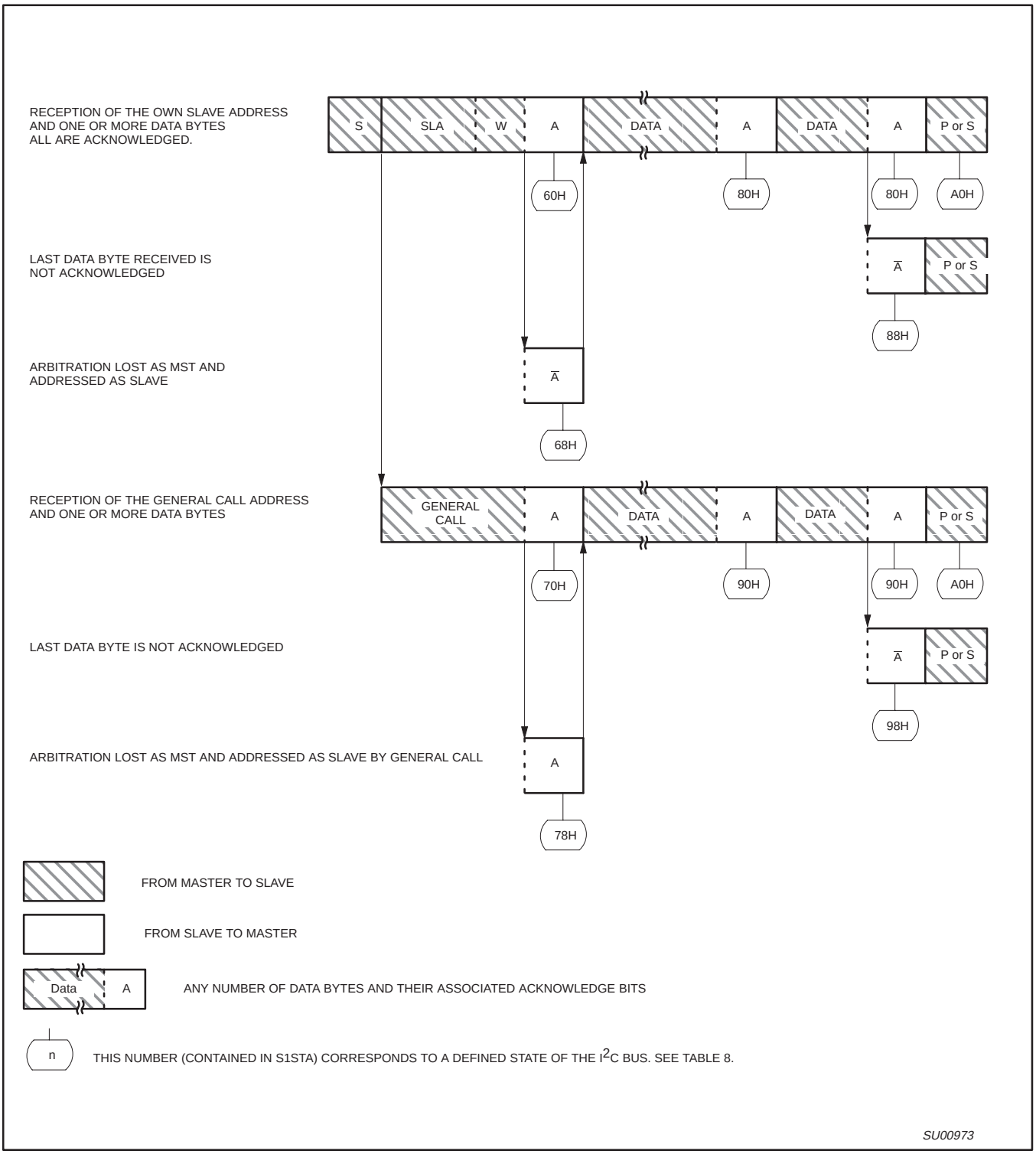

Figure 42. Format and States in the Slave Receiver Mode

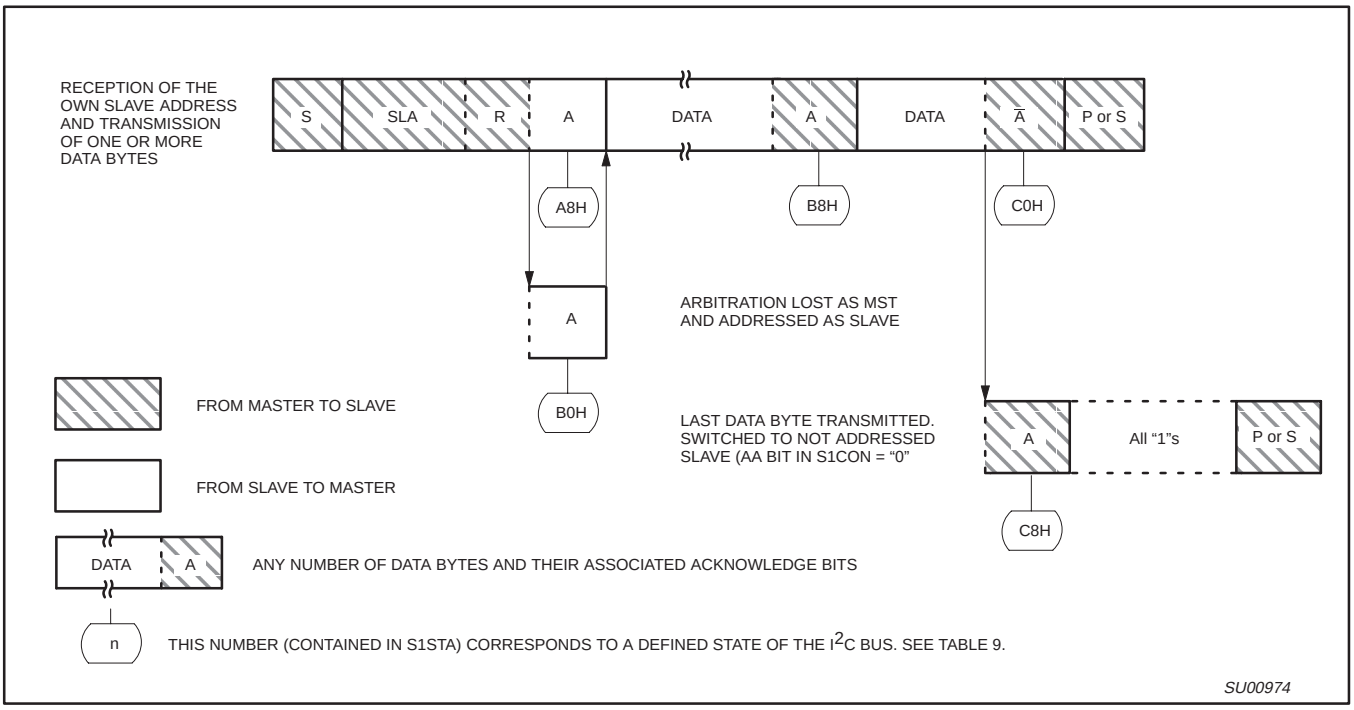

Figure 43. Format and States of the Slave Transmitter Mode

Table 6. Master Transmitter Mode

STATUS CODE (S1STA)	STATUS OF THE I^{2}C BUS AND SIO1 HARDWARE	APPLICATION SOFTWARE RESPONSE					NEXT ACTION TAKEN BY SIO1 HARDWARE
		TO/FROM S1DAT	TO S1CON				
			STA	STO	SI	AA	
08H	A START condition has been transmitted	Load SLA+W	X	0	0	X	SLA+W will be transmitted; ACK bit will be received
10H	A repeated START condition has been transmitted	Load SLA+W or	X	0	0	X	As above
		Load SLA+R	X	0	0	X	SLA+W will be transmitted; SIO1 will be switched to MST/REC mode
18H	SLA+W has been transmitted; ACK has been received	Load data byte or	0	0	0	X	Data byte will be transmitted; ACK bit will be received
		no S1DAT action or	1	0	0	X	Repeated START will be transmitted;
		no S1DAT action or	0	1	0	X	STOP condition will be transmitted; STO flag will be reset
		no S1DAT action	1	1	0	X	STOP condition followed by a START condition will be transmitted; STO flag will be reset
20H	SLA+W has been transmitted; NOT ACK has been received	Load data byte or	0	0	0	X	Data byte will be transmitted; ACK bit will be received
		no S1DAT action or	1	0	0	X	Repeated START will be transmitted;
		no S1DAT action or	0	1	0	X	STOP condition will be transmitted; STO flag will be reset
		no S1DAT action	1	1	0	X	STOP condition followed by a START condition will be transmitted; STO flag will be reset
28H	Data byte in S1DAT has been transmitted; ACK has been received	Load data byte or	0	0	0	X	Data byte will be transmitted; ACK bit will be received
		no S1DAT action or	1	0	0	X	Repeated START will be transmitted;
		no S1DAT action or	0	1	0	X	STOP condition will be transmitted; STO flag will be reset
		no S1DAT action	1	1	0	X	STOP condition followed by a START condition will be transmitted; STO flag will be reset
30H	Data byte in S1DAT has been transmitted; NOT ACK has been received	Load data byte or	0	0	0	X	Data byte will be transmitted; ACK bit will be received
		no S1DAT action or	1	0	0	X	Repeated START will be transmitted;
		no S1DAT action or	0	1	0	X	STOP condition will be transmitted; STO flag will be reset
		no S1DAT action	1	1	0	X	STOP condition followed by a START condition will be transmitted; STO flag will be reset
38H	Arbitration lost in SLA+R/$\overline{W}$ or Data bytes	No S1DAT action or	0	0	0	X	I^{2}C bus will be released; not addressed slave will be entered
		No S1DAT action	1	0	0	X	A START condition will be transmitted when the bus becomes free

Table 7. Master Receiver Mode

STATUS CODE (S1STA)	STATUS OF THE I²C BUS AND SIO1 HARDWARE	APPLICATION SOFTWARE RESPONSE					NEXT ACTION TAKEN BY SIO1 HARDWARE
		TO/FROM S1DAT	TO S1CON				
			STA	STO	SI	AA	
08H	A START condition has been transmitted	Load SLA+R	X	0	0	X	SLA+R will be transmitted; ACK bit will be received
10H	A repeated START condition has been transmitted	Load SLA+R or	X	0	0	X	As above
		Load SLA+W	X	0	0	X	SLA+W will be transmitted; SIO1 will be switched to MST/TRX mode
38H	Arbitration lost in NOT ACK bit	No S1DAT action or	0	0	0	X	I²C bus will be released; SIO1 will enter a slave mode
		No S1DAT action	1	0	0	X	A START condition will be transmitted when the bus becomes free
40H	SLA+R has been transmitted; ACK has been received	No S1DAT action or	0	0	0	0	Data byte will be received; NOT ACK bit will be returned
		no S1DAT action	0	0	0	1	Data byte will be received; ACK bit will be returned
48H	SLA+R has been transmitted; NOT ACK has been received	No S1DAT action or	1	0	0	X	Repeated START condition will be transmitted
		no S1DAT action or	0	1	0	X	STOP condition will be transmitted; STO flag will be reset
		no S1DAT action	1	1	0	X	STOP condition followed by a START condition will be transmitted; STO flag will be reset
50H	Data byte has been received; ACK has been returned	Read data byte or	0	0	0	0	Data byte will be received; NOT ACK bit will be returned
		read data byte	0	0	0	1	Data byte will be received; ACK bit will be returned
58H	Data byte has been received; NOT ACK has been returned	Read data byte or	1	0	0	X	Repeated START condition will be transmitted
		read data byte or	0	1	0	X	STOP condition will be transmitted; STO flag will be reset
		read data byte	1	1	0	X	STOP condition followed by a START condition will be transmitted; STO flag will be reset

Table 8. Slave Receiver Mode

STATUS CODE (S1STA)	STATUS OF THE I^{2}C BUS AND SIO1 HARDWARE	APPLICATION SOFTWARE RESPONSE					NEXT ACTION TAKEN BY SIO1 HARDWARE
		TO/FROM S1DAT	TO S1CON				
			STA	STO	SI	AA	
60H	Own SLA+W has been received; ACK has been returned	No S1DAT action or	X	0	0	0	Data byte will be received and NOT ACK will be returned
		no S1DAT action	X	0	0	1	Data byte will be received and ACK will be returned
68H	Arbitration lost in SLA+R/$\overline{W}$ as master; Own SLA+W has been received, ACK returned	No S1DAT action or	X	0	0	0	Data byte will be received and NOT ACK will be returned
		no S1DAT action	X	0	0	1	Data byte will be received and ACK will be returned
70H	General call address (00H) has been received; ACK has been returned	No S1DAT action or	X	0	0	0	Data byte will be received and NOT ACK will be returned
		no S1DAT action	X	0	0	1	Data byte will be received and ACK will be returned
78H	Arbitration lost in SLA+R/$\overline{W}$ as master; General call address has been received, ACK has been returned	No S1DAT action or	X	0	0	0	Data byte will be received and NOT ACK will be returned
		no S1DAT action	X	0	0	1	Data byte will be received and ACK will be returned
80H	Previously addressed with own SLV address; DATA has been received; ACK has been returned	Read data byte or	X	0	0	0	Data byte will be received and NOT ACK will be returned
		read data byte	X	0	0	1	Data byte will be received and ACK will be returned
88H	Previously addressed with own SLA; DATA byte has been received; NOT ACK has been returned	Read data byte or	0	0	0	0	Switched to not addressed SLV mode; no recognition of own SLA or General call address
		read data byte or	0	0	0	1	Switched to not addressed SLV mode; Own SLA will be recognized; General call address will be recognized if S1ADR.0 = logic 1
		read data byte or	1	0	0	0	Switched to not addressed SLV mode; no recognition of own SLA or General call address. A START condition will be transmitted when the bus becomes free
		read data byte	1	0	0	1	Switched to not addressed SLV mode; Own SLA will be recognized; General call address will be recognized if S1ADR.0 = logic 1. A START condition will be transmitted when the bus becomes free.
90H	Previously addressed with General Call; DATA byte has been received; ACK has been returned	Read data byte or	X	0	0	0	Data byte will be received and NOT ACK will be returned
		read data byte	X	0	0	1	Data byte will be received and ACK will be returned
98H	Previously addressed with General Call; DATA byte has been received; NOT ACK has been returned	Read data byte or	0	0	0	0	Switched to not addressed SLV mode; no recognition of own SLA or General call address
		read data byte or	0	0	0	1	Switched to not addressed SLV mode; Own SLA will be recognized; General call address will be recognized if S1ADR.0 = logic 1
		read data byte or	1	0	0	0	Switched to not addressed SLV mode; no recognition of own SLA or General call address. A START condition will be transmitted when the bus becomes free
		read data byte	1	0	0	1	Switched to not addressed SLV mode; Own SLA will be recognized; General call address will be recognized if S1ADR.0 = logic 1. A START condition will be transmitted when the bus becomes free.

Table 8. Slave Receiver Mode (Continued)

STATUS CODE (S1STA)	STATUS OF THE I²C BUS AND SIO1 HARDWARE	APPLICATION SOFTWARE RESPONSE					NEXT ACTION TAKEN BY SIO1 HARDWARE
		TO/FROM S1DAT	TO S1CON				
			STA	STO	SI	AA	
A0H	A STOP condition or repeated START condition has been received while still addressed as SLV/REC or SLV/TRX	No STDAT action or	0	0	0	0	Switched to not addressed SLV mode; no recognition of own SLA or General call address
		No STDAT action or	0	0	0	1	Switched to not addressed SLV mode; Own SLA will be recognized; General call address will be recognized if S1ADR.0 = logic 1
		No STDAT action or	1	0	0	0	Switched to not addressed SLV mode; no recognition of own SLA or General call address. A START condition will be transmitted when the bus becomes free
		No STDAT action	1	0	0	1	Switched to not addressed SLV mode; Own SLA will be recognized; General call address will be recognized if S1ADR.0 = logic 1. A START condition will be transmitted when the bus becomes free.

Table 9. Slave Transmitter Mode

STATUS CODE (S1STA)	STATUS OF THE I²C BUS AND SIO1 HARDWARE	APPLICATION SOFTWARE RESPONSE					NEXT ACTION TAKEN BY SIO1 HARDWARE
		TO/FROM S1DAT	TO S1CON				
			STA	STO	SI	AA	
A8H	Own SLA+R has been received; ACK has been returned	Load data byte or	X	0	0	0	Last data byte will be transmitted and ACK bit will be received
		load data byte	X	0	0	1	Data byte will be transmitted; ACK will be received
B0H	Arbitration lost in SLA+R/$\overline{W}$ as master; Own SLA+R has been received, ACK has been returned	Load data byte or	X	0	0	0	Last data byte will be transmitted and ACK bit will be received
		load data byte	X	0	0	1	Data byte will be transmitted; ACK bit will be received
B8H	Data byte in S1DAT has been transmitted; ACK has been received	Load data byte or	X	0	0	0	Last data byte will be transmitted and ACK bit will be received
		load data byte	X	0	0	1	Data byte will be transmitted; ACK bit will be received
C0H	Data byte in S1DAT has been transmitted; NOT ACK has been received	No S1DAT action or	0	0	0	01	Switched to not addressed SLV mode; no recognition of own SLA or General call address
		no S1DAT action or	0	0	0	1	Switched to not addressed SLV mode; Own SLA will be recognized; General call address will be recognized if S1ADR.0 = logic 1
		no S1DAT action or	1	0	0	0	Switched to not addressed SLV mode; no recognition of own SLA or General call address. A START condition will be transmitted when the bus becomes free
		no S1DAT action	1	0	0	1	Switched to not addressed SLV mode; Own SLA will be recognized; General call address will be recognized if S1ADR.0 = logic 1. A START condition will be transmitted when the bus becomes free.
C8H	Last data byte in S1DAT has been transmitted (AA = 0); ACK has been received	No S1DAT action or	0	0	0	0	Switched to not addressed SLV mode; no recognition of own SLA or General call address
		no S1DAT action or	0	0	0	1	Switched to not addressed SLV mode; Own SLA will be recognized; General call address will be recognized if S1ADR.0 = logic 1
		no S1DAT action or	1	0	0	0	Switched to not addressed SLV mode; no recognition of own SLA or General call address. A START condition will be transmitted when the bus becomes free
		no S1DAT action	1	0	0	1	Switched to not addressed SLV mode; Own SLA will be recognized; General call address will be recognized if S1ADR.0 = logic 1. A START condition will be transmitted when the bus becomes free.

Table 10. Miscellaneous States

STATUS CODE (S1STA)	STATUS OF THE I^{2}C BUS AND SIO1 HARDWARE	APPLICATION SOFTWARE RESPONSE					NEXT ACTION TAKEN BY SIO1 HARDWARE
		TO/FROM S1DAT	TO S1CON				
			STA	STO	SI	AA	
F8H	No relevant state information available; SI = 0	No S1DAT action	No S1CON action				Wait or proceed current transfer
00H	Bus error during MST or selected slave modes, due to an illegal START or STOP condition. State 00H can also occur when interference causes SIO1 to enter an undefined state.	No S1DAT action	0	1	0	X	Only the internal hardware is affected in the MST or addressed SLV modes. In all cases, the bus is released and SIO1 is switched to the not addressed SLV mode. STO is reset.

Slave Transmitter Mode: In the slave transmitter mode, a number of data bytes are transmitted to a master receiver (see Figure 43). Data transfer is initialized as in the slave receiver mode. When S1ADR and S1CON have been initialized, SIO1 waits until it is addressed by its own slave address followed by the data direction bit which must be “1” (R) for SIO1 to operate in the slave transmitter mode. After its own slave address and the R bit have been received, the serial interrupt flag (SI) is set and a valid status code can be read from S1STA. This status code is used to vector to an interrupt service routine, and the appropriate action to be taken for each of these status codes is detailed in Table 9. The slave transmitter mode may also be entered if arbitration is lost while SIO1 is in the master mode (see state B0H).

If the AA bit is reset during a transfer, SIO1 will transmit the last byte of the transfer and enter state C0H or C8H. SIO1 is switched to the not addressed slave mode and will ignore the master receiver if it continues the transfer. Thus the master receiver receives all 1s as serial data. While AA is reset, SIO1 does not respond to its own slave address or a general call address. However, the I^{2}C bus is still monitored, and address recognition may be resumed at any time by setting AA. This means that the AA bit may be used to temporarily isolate SIO1 from the I^{2}C bus.

Miscellaneous States: There are two S1STA codes that do not correspond to a defined SIO1 hardware state (see Table 10). These are discussed below.

S1STA = F8H:
This status code indicates that no relevant information is available because the serial interrupt flag, SI, is not yet set. This occurs between other states and when SIO1 is not involved in a serial transfer.

S1STA = 00H:
This status code indicates that a bus error has occurred during an SIO1 serial transfer. A bus error is caused when a START or STOP condition occurs at an illegal position in the format frame. Examples of such illegal positions are during the serial transfer of an address byte, a data byte, or an acknowledge bit. A bus error may also be caused when external interference disturbs the internal SIO1 signals. When a bus error occurs, SI is set. To recover from a bus error, the STO flag must be set and SI must be cleared. This causes SIO1 to enter the “not addressed” slave mode (a defined state) and to clear the STO flag (no other bits in S1CON are affected). The SDA and SCL lines are released (a STOP condition is not transmitted).

Some Special Cases: The SIO1 hardware has facilities to handle the following special cases that may occur during a serial transfer:

Simultaneous Repeated START Conditions from Two Masters

A repeated START condition may be generated in the master transmitter or master receiver modes. A special case occurs if another master simultaneously generates a repeated START condition (see Figure 44). Until this occurs, arbitration is not lost by either master since they were both transmitting the same data.

If the SIO1 hardware detects a repeated START condition on the I^{2}C bus before generating a repeated START condition itself, it will release the bus, and no interrupt request is generated. If another master frees the bus by generating a STOP condition, SIO1 will transmit a normal START condition (state 08H), and a retry of the total serial data transfer can commence.

Data Transfer After Loss of Arbitration
Arbitration may be lost in the master transmitter and master receiver modes (see Figure 36). Loss of arbitration is indicated by the following states in S1STA; 38H, 68H, 78H, and B0H (see Figures 40 and 41).

If the STA flag in S1CON is set by the routines which service these states, then, if the bus is free again, a START condition (state 08H) is transmitted without intervention by the CPU, and a retry of the total serial transfer can commence.

Forced Access to the I^{2}C Bus
In some applications, it may be possible for an uncontrolled source to cause a bus hang-up. In such situations, the problem may be caused by interference, temporary interruption of the bus or a temporary short-circuit between SDA and SCL.

If an uncontrolled source generates a superfluous START or masks a STOP condition, then the I^{2}C bus stays busy indefinitely. If the STA flag is set and bus access is not obtained within a reasonable amount of time, then a forced access to the I^{2}C bus is possible. This is achieved by setting the STO flag while the STA flag is still set. No STOP condition is transmitted. The SIO1 hardware behaves as if a STOP condition was received and is able to transmit a START condition. The STO flag is cleared by hardware (see Figure 45).

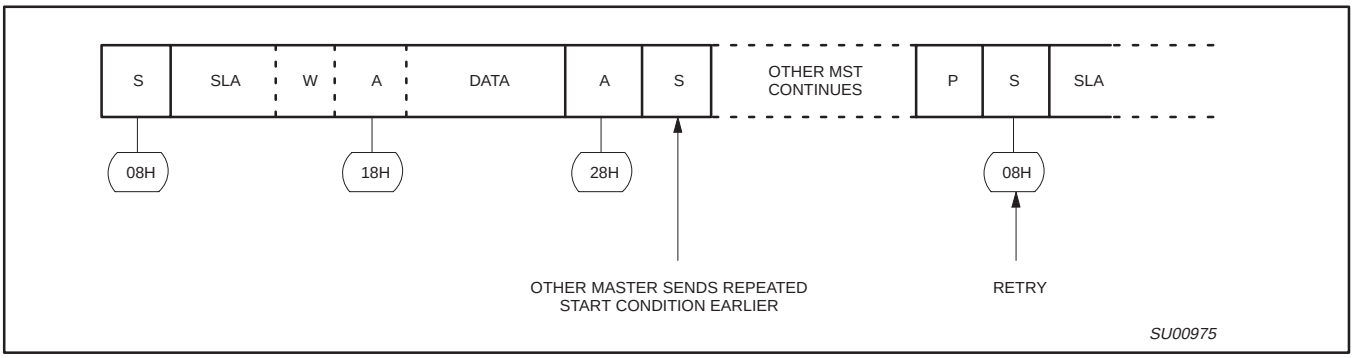

Figure 44. Simultaneous Repeated START Conditions from 2 Masters

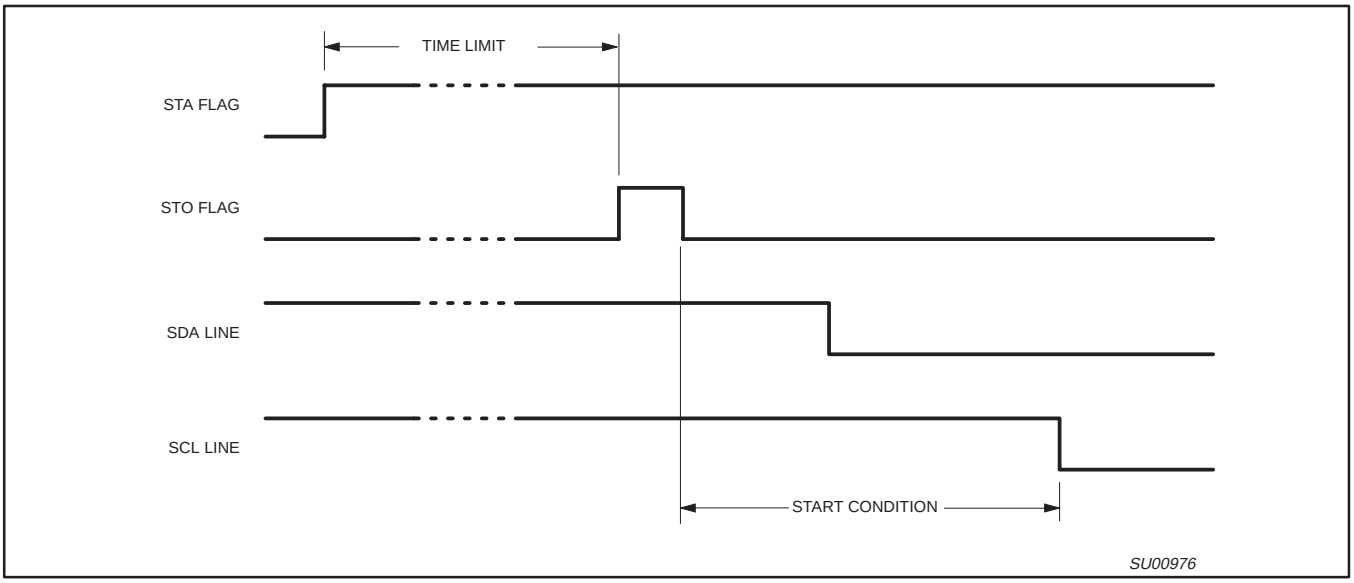

Figure 45. Forced Access to a Busy I²C Bus

I²C Bus Obstructed by a Low Level on SCL or SDA

An I²C bus hang-up occurs if SDA or SCL is pulled LOW by an uncontrolled source. If the SCL line is obstructed (pulled LOW) by a device on the bus, no further serial transfer is possible, and the SIO1 hardware cannot resolve this type of problem. When this occurs, the problem must be resolved by the device that is pulling the SCL bus line LOW.

If the SDA line is obstructed by another device on the bus (e.g., a slave device out of bit synchronization), the problem can be solved by transmitting additional clock pulses on the SCL line (see Figure 46). The SIO1 hardware transmits additional clock pulses when the STA flag is set, but no START condition can be generated because the SDA line is pulled LOW while the I²C bus is considered free. The SIO1 hardware attempts to generate a START condition after every two additional clock pulses on the SCL line. When the SDA line is eventually released, a normal START condition is transmitted, state 08H is entered, and the serial transfer continues.

If a forced bus access occurs or a repeated START condition is transmitted while SDA is obstructed (pulled LOW), the SIO1 hardware performs the same action as described above. In each case, state 08H is entered after a successful START condition is transmitted and normal serial transfer continues. Note that the CPU is not involved in solving these bus hang-up problems.

Bus Error

A bus error occurs when a START or STOP condition is present at an illegal position in the format frame. Examples of illegal positions are during the serial transfer of an address byte, a data or an acknowledge bit.

The SIO1 hardware only reacts to a bus error when it is involved in a serial transfer either as a master or an addressed slave. When a bus error is detected, SIO1 immediately switches to the not addressed slave mode, releases the SDA and SCL lines, sets the interrupt flag, and loads the status register with 00H. This status code may be used to vector to a service routine which either attempts the aborted serial transfer again or simply recovers from the error condition as shown in Table 10.

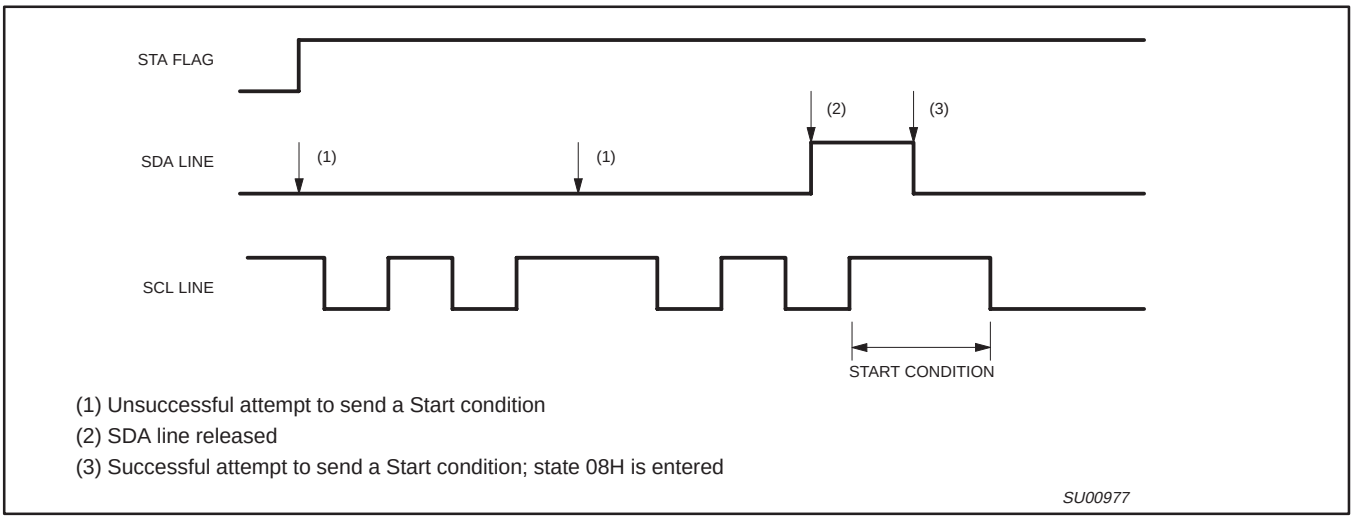

Figure 46. Recovering from a Bus Obstruction Caused by a Low Level on SDA

Software Examples of SIO1 Service Routines: This section consists of a software example for:
- Initialization of SIO1 after a RESET
- Entering the SIO1 interrupt routine
- The 26 state service routines for the
  - Master transmitter mode
  - Master receiver mode
  - Slave receiver mode
  - Slave transmitter mode

INITIALIZATION

In the initialization routine, SIO1 is enabled for both master and slave modes. For each mode, a number of bytes of internal data RAM are allocated to the SIO to act as either a transmission or reception buffer. In this example, 8 bytes of internal data RAM are reserved for different purposes. The data memory map is shown in Figure 47. The initialization routine performs the following functions:
- S1ADR is loaded with the part's own slave address and the general call bit (GC)
- P1.6 and P1.7 bit latches are loaded with logic 1s
- RAM location HADD is loaded with the high-order address byte of the service routines
- The SIO1 interrupt enable and interrupt priority bits are set
- The slave mode is enabled by simultaneously setting the ENS1 and AA bits in S1CON and the serial clock frequency (for master modes) is defined by loading CR0 and CR1 in S1CON. The master routines must be started in the main program.

The SIO1 hardware now begins checking the I^{2}C bus for its own slave address and general call. If the general call or the own slave address is detected, an interrupt is requested and S1STA is loaded with the appropriate state information. The following text describes a fast method of branching to the appropriate service routine.

SIO1 INTERRUPT ROUTINE

When the SIO1 interrupt is entered, the PSW is first pushed on the stack. Then S1STA and HADD (loaded with the high-order address byte of the 26 service routines by the initialization routine) are pushed on to the stack. S1STA contains a status code which is the lower byte of one of the 26 service routines. The next instruction is RET, which is the return from subroutine instruction. When this instruction is executed, the high and low order address bytes are popped from stack and loaded into the program counter.

The next instruction to be executed is the first instruction of the state service routine. Seven bytes of program code (which execute in eight machine cycles) are required to branch to one of the 26 state service routines.

```
SI      PUSH  PSW     Save PSW
        PUSH  S1STA   Push status code
                      (low order address byte)
        PUSH  HADD    Push high order address byte
        RET           Jump to state service routine
```

The state service routines are located in a 256-byte page of program memory. The location of this page is defined in the initialization routine. The page can be located anywhere in program memory by loading data RAM register HADD with the page number. Page 01 is chosen in this example, and the service routines are located between addresses 0100H and 01FFH.

THE STATE SERVICE ROUTINES

The state service routines are located 8 bytes from each other. Eight bytes of code are sufficient for most of the service routines. A few of the routines require more than 8 bytes and have to jump to other locations to obtain more bytes of code. Each state routine is part of the SIO1 interrupt routine and handles one of the 26 states. It ends with a RETI instruction which causes a return to the main program.

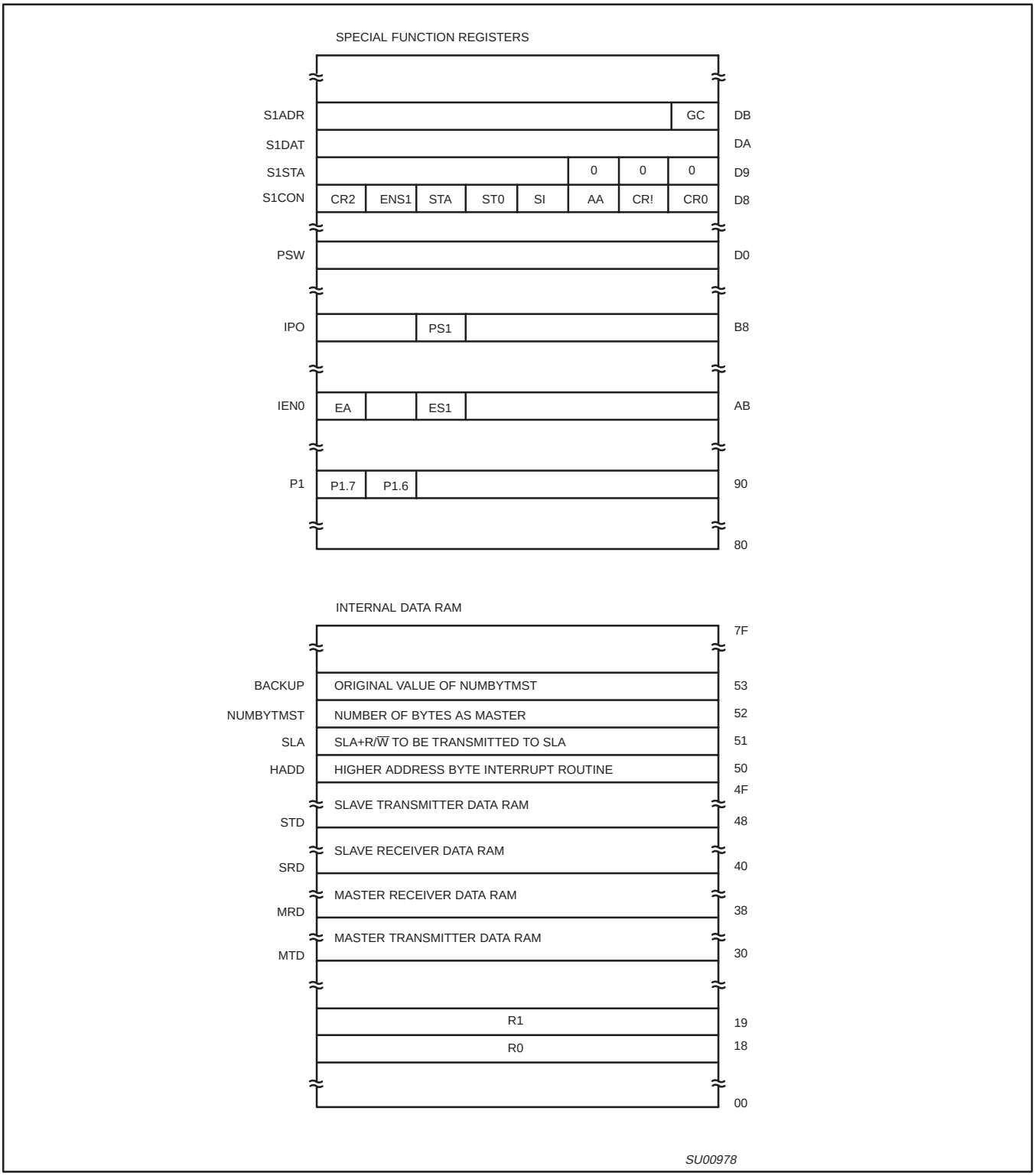

Figure 47. SIO1 Data Memory Map

Master Transmitter and Master Receiver Modes

The master mode is entered in the main program. To enter the master transmitter mode, the main program must first load the internal data RAM with the slave address, data bytes, and the number of data bytes to be transmitted. To enter the master receiver mode, the main program must first load the internal data RAM with the slave address and the number of data bytes to be received. The R/$\overline{W}$ bit determines whether SIO1 operates in the master transmitter or master receiver mode.

Master mode operation commences when the STA bit in S1CION is set by the SETB instruction and data transfer is controlled by the master state service routines in accordance with Table 6, Table 7, Figure 40, and Figure 41. In the example below, 4 bytes are transferred. There is no repeated START condition. In the event of lost arbitration, the transfer is restarted when the bus becomes free. If a bus error occurs, the I^{2}C bus is released and SIO1 enters the not selected slave receiver mode. If a slave device returns a not acknowledge, a STOP condition is generated.

A repeated START condition can be included in the serial transfer if the STA flag is set instead of the STO flag in the state service routines vectored to by status codes 28H and 58H. Additional software must be written to determine which data is transferred after a repeated START condition.

Slave Transmitter and Slave Receiver Modes

After initialization, SIO1 continually tests the I^{2}C bus and branches to one of the slave state service routines if it detects its own slave address or the general call address (see Table 8, Table 9, Figure 42, and Figure 43). If arbitration was lost while in the master mode, the master mode is restarted after the current transfer. If a bus error occurs, the I^{2}C bus is released and SIO1 enters the not selected slave receiver mode.

In the slave receiver mode, a maximum of 8 received data bytes can be stored in the internal data RAM. A maximum of 8 bytes ensures that other RAM locations are not overwritten if a master sends more bytes. If more than 8 bytes are transmitted, a not acknowledge is returned, and SIO1 enters the not addressed slave receiver mode. A maximum of one received data byte can be stored in the internal data RAM after a general call address is detected. If more than one byte is transmitted, a not acknowledge is returned and SIO1 enters the not addressed slave receiver mode.

In the slave transmitter mode, data to be transmitted is obtained from the same locations in the internal data RAM that were previously loaded by the main program. After a not acknowledge has been returned by a master receiver device, SIO1 enters the not addressed slave mode.

Adapting the Software for Different Applications

The following software example shows the typical structure of the interrupt routine including the 26 state service routines and may be used as a base for user applications. If one or more of the four modes are not used, the associated state service routines may be removed but, care should be taken that a deleted routine can never be invoked.

This example does not include any time-out routines. In the slave modes, time-out routines are not very useful since, in these modes, SIO1 behaves essentially as a passive device. In the master modes, an internal timer may be used to cause a time-out if a serial transfer is not complete after a defined period of time. This time period is defined by the system connected to the I^{2}C bus.

```
                !*************************************************************************************
                ! SI01 EQUATE LIST
                !*************************************************************************************
                !*************************************************************************************
                ! LOCATIONS OF THE SI01 SPECIAL FUNCTION REGISTERS
                !*************************************************************************************
00D8            S1CON     –0xd8
00D9            S1STA     –0xd9
00DA            S1DAT     –0xda
00DB            S1ADR     –0xdb

00A8            IEN0      –0xa8
00B8            IP0       –02b8

                !*************************************************************************************
                ! BIT LOCATIONS
                !*************************************************************************************

00DD            STA       –0xdd                          ! STA bit in S1CON
00BD            SI01HP    –0xbd                          ! IP0, SI01 Priority bit

                !*************************************************************************************
                ! IMMEDIATE DATA TO WRITE INTO REGISTER S1CON
                !*************************************************************************************
00D5            ENS1_NOTSTA_STO_NOTSI_AA_CR0             –0xd5    ! Generates STOP
                                                                  ! (CR0 = 100kHz)
00C5            ENS1_NOTSTA_NOTSTO_NOTSI_AA_CR0          –0xc5    ! Releases BUS and
                                                                  ! ACK
00C1            ENS1_NOTSTA_NOTSTO_NOTSI_NOTAA_CR0       –0xc1    ! Releases BUS and
                                                                  ! NOT ACK
00E5            ENS1_STA_NOTSTO_NOTSI_AA_CR0             –0xe5    ! Releases BUS and
                                                                  ! set STA

                !*************************************************************************************
                ! GENERAL IMMEDIATE DATA
                !*************************************************************************************
0031            OWNSLA    –0x31                          ! Own SLA+General Call
                                                         ! must be written into S1ADR
00A0            ENSI01    –0xa0                          ! EA+ES1, enable SIO1 interrupt
                                                         ! must be written into IEN0
0001            PAG1      –0x01                          ! select PAG1 as HADD
00C0            SLAW      –0xc0                          ! SLA+W to be transmitted
00C1            SLAR      –0xc1                          ! SLA+R to be transmitted
0018            SELRB3    –0x18                          ! Select Register Bank 3

                !*************************************************************************************
                ! LOCATIONS IN DATA RAM
                !*************************************************************************************
0030            MTD       –0x30                          ! MST/TRX/DATA base address
0038            MRD       –0x38                          ! MST/REC/DATA base address
0040            SRD       –0x40                          ! SLV/REC/DATA base address
0048            STD       –0x48                          ! SLV/TRX/DATA base address

0053            BACKUP        –0x53                      ! Backup from NUMBYTMST
                                                         ! To restore NUMBYTMST in case
                                                         ! of an Arbitration Loss.
0052            NUMBYTMST     –0x52                      ! Number of bytes to transmit
                                                         ! or receive as MST.
0051            SLA           –0x51                      ! Contains SLA+R/W to be
                                                         ! transmitted.
0050            HADD          –0x50                      ! High Address byte for STATE 0
                                                         ! till STATE 25.
```

```
                        !*****************************************************************************************
                        ! INITIALIZATION ROUTINE
                        ! Example to initialize IIC Interface as slave receiver or slave transmitter and
                        ! start a MASTER TRANSMIT or a MASTER RECEIVE function. 4 bytes will be transmitted or received.
                        !*****************************************************************************************
                        .sect     strt
                        .base     0x00
0000    4100                              ajmp  INIT                          ! RESET

                        .sect     initial
                        .base     0x200
0200    75DB31          INIT:             mov   S1ADR,#OWNSLA                 ! Load own SLA + enable
                                                                              ! general call recognition
0203    D296                              setb  P1(6)                         ! P1.6 High level.
0205    D297                              setb  P1(7)                         ! P1.7 High level.
0207    755001                            mov   HADD,#PAG1
020A    43A8A0                            orl   IEN0,#ENSI01                  ! Enable SI01 interrupt
020D    C2BD                              clr   SI01HP                        ! SI01 interrupt low priority
020F    75D8C5                            mov   S1CON, #ENS1_NOTSTA_NOTSTO_NOTSI_AA_CR0
                                                                              ! Initialize SLV funct.

                        !*****************************************************************************************

                        !–––––––––––––––––––––––––––––––––––––––––––––––––––––––––––––––––––––––––––––––––––––
                        ! START MASTER TRANSMIT FUNCTION
                        !–––––––––––––––––––––––––––––––––––––––––––––––––––––––––––––––––––––––––––––––––––––

0212    755204                            mov   NUMBYTMST,#0x4                ! Transmit 4 bytes.
0215    7551C0                            mov   SLA,#SLAW                     ! SLA+W, Transmit funct.
0218    D2DD                              setb  STA                           ! set STA in S1CON

                        !–––––––––––––––––––––––––––––––––––––––––––––––––––––––––––––––––––––––––––––––––––––
                        ! START MASTER RECEIVE FUNCTION
                        !–––––––––––––––––––––––––––––––––––––––––––––––––––––––––––––––––––––––––––––––––––––
021A    755204                            mov   NUMBYTMST,#0x4                ! Receive 4 bytes.
021D    7551C1                            mov   SLA,#SLAR                     ! SLA+R, Receive funct.
0220    D2DD                              setb  STA                           ! set STA in S1CON


                        !*****************************************************************************************
                        ! SI01 INTERRUPT ROUTINE
                        !*****************************************************************************************
                        .sect     intvec                                      ! SI01 interrupt vector
                        .base     0x00

                        ! S1STA and HADD are pushed onto the stack.
                        ! They serve as return address for the RET instruction.
                        ! The RET instruction sets the Program Counter to address HADD,
                        ! S1STA and jumps to the right subroutine.

002B    C0D0                              push  psw                           ! save  psw
002D    C0D9                              push  S1STA
002F    C050                              push  HADD
0031    22                                ret                                 ! JMP to address HADD,S1STA.

                        !–––––––––––––––––––––––––––––––––––––––––––––––––––––––––––––––––––––––––––––––––––––
                        ! STATE    : 00, Bus error.
                        ! ACTION   : Enter not addressed SLV mode and release bus. STO reset.
                        !–––––––––––––––––––––––––––––––––––––––––––––––––––––––––––––––––––––––––––––––––––––
                        .sect     st0
                        .base     0x100

0100    75D8D5                            mov   S1CON,#ENS1_NOTSTA_STO_NOTSI_AA_CR0 ! clr SI
                                                                                    ! set  STO,AA
0103    D0D0                              pop   psw
0105    32                                reti
```

```
                        !*****************************************************************************************
                        !*****************************************************************************************
                        ! MASTER STATE SERVICE ROUTINES
                        !*****************************************************************************************
                        ! State 08 and State 10 are both for MST/TRX and MST/REC.
                        ! The R/W bit decides whether the next state is within
                        ! MST/TRX mode or within MST/REC mode.
                        !*****************************************************************************************

                        !–––––––––––––––––––––––––––––––––––––––––––––––––––––––––––––––––––––––––––––––––––––
                        ! STATE    : 08, A, START condition has been transmitted.
                        ! ACTION   : SLA+R/W are transmitted, ACK bit is received.
                        !–––––––––––––––––––––––––––––––––––––––––––––––––––––––––––––––––––––––––––––––––––––
                        .sect      mts8
                        .base      0x108

0108    8551DA                              mov   S1DAT,SLA                        ! Load  SLA+R/W
010B    75D8C5                              mov   S1CON,#ENS1_NOTSTA_NOTSTO_NOTSI_AA_CR0
                                                                                   ! clr  SI
010E    01A0                                ajmp  INITBASE1

                        !–––––––––––––––––––––––––––––––––––––––––––––––––––––––––––––––––––––––––––––––––––––
                        ! STATE    : 10, A repeated START condition has been
                        !              transmitted.
                        ! ACTION   : SLA+R/W are transmitted, ACK bit is received.
                        !–––––––––––––––––––––––––––––––––––––––––––––––––––––––––––––––––––––––––––––––––––––
                        .sect      mts10
                        .base      0x110

0110    8551DA                              mov   S1DAT,SLA                        ! Load  SLA+R/W
0113    75D8C5                              mov   S1CON,#ENS1_NOTSTA_NOTSTO_NOTSI_AA_CR0
                                                                                   ! clr  SI
010E    01A0                                ajmp  INITBASE1

                        .sect      ibase1
                        .base      0xa0
00A0    75D018          INITBASE1:          mov   psw,#SELRB3
00A3    7930                                mov   r1,#MTD
00A5    7838                                mov   r0,#MRD
00A7    855253                              mov   BACKUP,NUMBYTMST                 ! Save initial value
00AA    D0D0                                pop   psw
00AC    32                                  reti


                        !*****************************************************************************************
                        !*****************************************************************************************
                        ! MASTER TRANSMITTER STATE SERVICE ROUTINES
                        !*****************************************************************************************
                        !*****************************************************************************************

                        !–––––––––––––––––––––––––––––––––––––––––––––––––––––––––––––––––––––––––––––––––––––
                        ! STATE    : 18, Previous state was STATE 8 or STATE 10, SLA+W have been transmitted,
                        !              ACK has been received.
                        ! ACTION   : First DATA is transmitted, ACK bit  is received.
                        !–––––––––––––––––––––––––––––––––––––––––––––––––––––––––––––––––––––––––––––––––––––
                        .sect      mts18
                        .base      0x118

0118    75D018                              mov   psw,#SELRB3
011B    87DA                                mov   S1DAT,@r1
011D    01B5                                ajmp  CON
```

```
                        !–––––––––––––––––––––––––––––––––––––––––––––––––––––––––––
                        ! STATE    : 20, SLA+W have been transmitted, NOT ACK has been received
                        ! ACTION   : Transmit STOP condition.
                        !–––––––––––––––––––––––––––––––––––––––––––––––––––––––––––
                        .sect      mts20
                        .base      0x120

0120   75D8D5                                mov   S1CON,#ENS1_NOTSTA_STO_NOTSI_AA_CR0
                                                                          ! set  STO, clr  SI
0123   D0D0                                  pop   psw
0125   32                                    reti

                        !–––––––––––––––––––––––––––––––––––––––––––––––––––––––––––
                        ! STATE    : 28, DATA of S1DAT have been transmitted, ACK received.
                        ! ACTION   : If Transmitted DATA is last DATA then transmit a STOP condition,
                        !             else transmit next DATA.
                        !–––––––––––––––––––––––––––––––––––––––––––––––––––––––––––
                        .sect      mts28
                        .base      0x128

0128   D55285                                djnz  NUMBYTMST,NOTLDAT1          ! JMP if NOT last DATA
012B   75D8D5                                mov   S1CON,#ENS1_NOTSTA_STO_NOTSI_AA_CR0
                                                                          ! clr  SI, set  AA
012E   01B9                                  ajmp  RETmt

                        .sect      mts28sb
                        .base      0x0b0
00B0   75D018           NOTLDAT1:            mov   psw,#SELRB3
00B3   87DA                                  mov   S1DAT,@r1
00B5   75D8C5           CON:                 mov   S1CON,#ENS1_NOTSTA_NOTSTO_NOTSI_AA_CR0
                                                                          ! clr  SI, set   AA
00B8   09                                    inc   r1
00B9   D0D0             RETmt      :         pop   psw
00BB   32                                    reti
                        !–––––––––––––––––––––––––––––––––––––––––––––––––––––––––––
                        ! STATE    : 30, DATA of S1DAT have been transmitted, NOT ACK received.
                        ! ACTION   : Transmit a STOP condition.
                        !–––––––––––––––––––––––––––––––––––––––––––––––––––––––––––
                        .sect      mts30
                        .base      0x130

0130   75D8D5                                mov   S1CON,#ENS1_NOTSTA_STO_NOTSI_AA_CR0
                                                                          ! set  STO, clr  SI
0133   D0D0                                  pop   psw
0135   32                                    reti

                        !–––––––––––––––––––––––––––––––––––––––––––––––––––––––––––
                        ! STATE    : 38, Arbitration lost in SLA+W or DATA.
                        ! ACTION   : Bus is released, not addressed SLV mode is entered.
                        !             A new START condition is transmitted when the IIC bus is free again.
                        !–––––––––––––––––––––––––––––––––––––––––––––––––––––––––––
                        .sect      mts38
                        .base      0x138

0138   75D8E5                                mov   S1CON,#ENS1_STA_NOTSTO_NOTSI_AA_CR0
013B   855352                                mov   NUMBYTMST,BACKUP
013E   01B9                                  ajmp  RETmt
```

```
                        !*****************************************************************************************
                        !*****************************************************************************************
                        ! MASTER RECEIVER STATE SERVICE ROUTINES
                        !*****************************************************************************************
                        !*****************************************************************************************

                        !–––––––––––––––––––––––––––––––––––––––––––––––––––––––––––––––––––––––––––––––––––––
                        ! STATE    : 40, Previous state was STATE 08 or STATE 10,
                        !            SLA+R have been transmitted, ACK received.
                        ! ACTION   : DATA will be received, ACK returned.
                        !–––––––––––––––––––––––––––––––––––––––––––––––––––––––––––––––––––––––––––––––––––––
                        .sect      mts40
                        .base      0x140

0140    75D8C5                             mov   S1CON,#ENS1_NOTSTA_NOTSTO_NOTSI_AA_CR0
                                                                                  ! clr  STA, STO, SI  set  AA
0143    D0D0                               pop   psw
        32                                 reti

                        !–––––––––––––––––––––––––––––––––––––––––––––––––––––––––––––––––––––––––––––––––––––
                        ! STATE    : 48, SLA+R have been transmitted, NOT ACK received.
                        ! ACTION   : STOP condition will be generated.
                        !–––––––––––––––––––––––––––––––––––––––––––––––––––––––––––––––––––––––––––––––––––––
                        .sect      mts48
                        .base      0x148

0148    75D8D5          STOP:              mov   S1CON,#ENS1_NOTSTA_STO_NOTSI_AA_CR0
                                                                                  ! set  STO, clr  SI
014B    D0D0                               pop   psw
014D    32                                 reti

                        !–––––––––––––––––––––––––––––––––––––––––––––––––––––––––––––––––––––––––––––––––––––
                        ! STATE    : 50, DATA have been received, ACK returned.
                        ! ACTION   : Read DATA of S1DAT.
                        !            DATA will be received, if it is last DATA
                                     then NOT ACK will be returned else ACK will be returned.
                        !–––––––––––––––––––––––––––––––––––––––––––––––––––––––––––––––––––––––––––––––––––––
                        .sect      mrs50
                        .base      0x150

0150    75D018                             mov   psw,#SELRB3
0153    A6DA                               mov   @r0,S1DAT                    ! Read received DATA
0155    01C0                               ajmp  REC1

                        .sect      mrs50s
                        .base      0xc0

00C0    D55205          REC1:              djnz  NUMBYTMST,NOTLDAT2
00C3    75D8C1                             mov   S1CON,#ENS1_NOTSTA_NOTSTO_NOTSI_NOTAA_CR0
                                                                                  ! clr  SI,AA
00C6    8003                               sjmp  RETmr
00C8    75D8C5          NOTLDAT2:          mov   S1CON,#ENS1_NOTSTA_NOTSTO_NOTSI_AA_CR0
                                                                                  ! clr  SI, set  AA
00CB    08              RETmr:             inc   r0
00CC    D0D0                               pop   psw
00CE    32                                 reti

                        !–––––––––––––––––––––––––––––––––––––––––––––––––––––––––––––––––––––––––––––––––––––
                        ! STATE    : 58, DATA have been received, NOT ACK returned.
                        ! ACTION   : Read DATA of S1DAT and generate a STOP condition.
                        !–––––––––––––––––––––––––––––––––––––––––––––––––––––––––––––––––––––––––––––––––––––
                        .sect      mrs58
                        .base      0x158

0158    75D018                             mov   psw,#SELRB3
015B    A6DA                               mov   @R0,S1DAT
015D    80E9                               sjmp  STOP
```

```
                        !*****************************************************************************************
                        !*****************************************************************************************
                        ! SLAVE RECEIVER STATE SERVICE ROUTINES
                        !*****************************************************************************************
                        !*****************************************************************************************

                        !–––––––––––––––––––––––––––––––––––––––––––––––––––––––––––––––––––––––––––––––––––––
                        ! STATE    : 60, Own SLA+W have been received, ACK returned.
                        ! ACTION   : DATA will be received and ACK returned.
                        !–––––––––––––––––––––––––––––––––––––––––––––––––––––––––––––––––––––––––––––––––––––
                        .sect      srs60
                        .base      0x160
0160    75D8C5                          mov   S1CON,#ENS1_NOTSTA_NOTSTO_NOTSI_AA_CR0
                                                                                  ! clr  SI, set  AA
0163    75D018                          mov   psw,#SELRB3
0166    01D0                            ajmp  INITSRD
                        .sect      insrd
                        .base      0xd0

00D0    7840            INITSRD:        mov   r0,#SRD
00D2    7908                            mov   r1,#8
00D4    D0D0                            pop   psw
00D6    32                              reti

                        !–––––––––––––––––––––––––––––––––––––––––––––––––––––––––––––––––––––––––––––––––––––
                        ! STATE    : 68, Arbitration lost in SLA and R/W as MST
                        !            Own SLA+W have been received, ACK returned
                        ! ACTION   : DATA will be received and ACK returned.
                        !            STA is set to restart MST mode after the bus is free again.
                        !–––––––––––––––––––––––––––––––––––––––––––––––––––––––––––––––––––––––––––––––––––––
                        .sect      srs68
                        .base      0x168
0168    75D8E5                          mov   S1CON,#ENS1_STA_NOTSTO_NOTSI_AA_CR0
016B    75D018                          mov   psw,#SELRB3
016E    01D0                            ajmp  INITSRD

                        !–––––––––––––––––––––––––––––––––––––––––––––––––––––––––––––––––––––––––––––––––––––
                        ! STATE    : 70, General call has been received, ACK returned.
                        ! ACTION   : DATA will be received and ACK returned.
                        !–––––––––––––––––––––––––––––––––––––––––––––––––––––––––––––––––––––––––––––––––––––
                        .sect      srs70
                        .base      0x170
0170    75D8C5                          mov   S1CON,#ENS1_NOTSTA_NOTSTO_NOTSI_AA_CR0
                                                                                  ! clr  SI, set  AA
0173    75D018                          mov   psw,#SELRB3                         ! Initialize SRD counter
0176    01D0                            ajmp  initsrd

                        !–––––––––––––––––––––––––––––––––––––––––––––––––––––––––––––––––––––––––––––––––––––
                        ! STATE    : 78, Arbitration lost in SLA+R/W as MST.
                        !            General call has been received, ACK returned.
                        ! ACTION   : DATA will be received and ACK returned.
                        !            STA is set to restart MST mode after the bus is free again.
                        !–––––––––––––––––––––––––––––––––––––––––––––––––––––––––––––––––––––––––––––––––––––
                        .sect      srs78
                        .base      0x178
0178    75D8E5                          mov   S1CON,#ENS1_STA_NOTSTO_NOTSI_AA_CR0
017B    75D018                          mov   psw,#SELRB3                         ! Initialize SRD counter
017E    01D0                            ajmp  INITSRD
```

```
                        !–––––––––––––––––––––––––––––––––––––––––––––––––––
                        ! STATE   : 80, Previously addressed with own SLA. DATA received, ACK returned.
                        ! ACTION  : Read DATA.
                        !           IF received DATA was the last
                        !           THEN superfluous DATA will be received  and NOT ACK returned
                                    ELSE next DATA will be received and ACK returned.
                        !–––––––––––––––––––––––––––––––––––––––––––––––––––
                        .sect     srs80
                        .base     0x180

0180   75D018                              mov    psw,#SELRB3
0183   A6DA                                mov    @r0,S1DAT               ! Read received DATA
0185   01D8                                ajmp   REC2

                        .sect     srs80s
                        .base     0xd8

00D8   D906             REC2:              djnz   r1,NOTLDAT3
00DA   75D8C1           LDAT:              mov    S1CON,#ENS1_NOTSTA_NOTSTO_NOTSI_NOTAA_CR0
                                                                          ! clr  SI,AA
00DD   D0D0                                pop    psw
00DF   32                                  reti
00E0   75D8C5           NOTLDAT3:          mov    S1CON,#ENS1_NOTSTA_NOTSTO_NOTSI_AA_CR0
                                                                          ! clr  SI, set  AA
00E3   08                                  inc    r0
00E4   D0D0             RETsr:             pop    psw
00E6   32                                  reti

                        !–––––––––––––––––––––––––––––––––––––––––––––––––––
                        ! STATE   : 88, Previously addressed with own SLA. DATA received NOT ACK returned.
                        ! ACTION  : No save of DATA, Enter NOT addressed SLV mode.
                        !           Recognition of own SLA. General call recognized, if S1ADR. 0–1.
                        !–––––––––––––––––––––––––––––––––––––––––––––––––––
                        .sect     srs88
                        .base     0x188

0188   75D8C5                              mov    S1CON,#ENS1_NOTSTA_NOTSTO_NOTSI_AA_CR0
                                                                          ! clr  SI, set  AA
018B   01E4                                ajmp   RETsr

                        !–––––––––––––––––––––––––––––––––––––––––––––––––––
                        ! STATE   : 90, Previously addressed with general call.
                        !           DATA has been received, ACK has been returned.
                        ! ACTION  : Read DATA.
                                    After General call only one byte will be received with ACK
                        !           the second DATA will be received with NOT ACK.
                        !           DATA will be received and NOT ACK returned.
                        !–––––––––––––––––––––––––––––––––––––––––––––––––––
                        .sect     srs90
                        .base     0x190

0190   75D018                              mov    psw,#SELRB3
0193   A6DA                                mov    @r0,S1DAT               ! Read received DATA
0195   01DA                                ajmp   LDAT
                        !–––––––––––––––––––––––––––––––––––––––––––––––––––
                        ! STATE   : 98, Previously addressed with general call.
                        !           DATA has been received, NOT ACK has been returned.
                        ! ACTION  : No save of DATA, Enter NOT addressed SLV mode.
                                    Recognition of own SLA. General call recognized, if S1ADR. 0–1.
                        !–––––––––––––––––––––––––––––––––––––––––––––––––––
                        .sect     srs98
                        .base     0x198

0198   75D8C5                              mov    S1CON,#ENS1_NOTSTA_NOTSTO_NOTSI_AA_CR0
                                                                          ! clr  SI, set  AA
019B   D0D0                                pop    psw
019D   32                                  reti
```

```
                        !–––––––––––––––––––––––––––––––––––––––––––––––––––––––––––––
                        ! STATE    : A0, A STOP condition or repeated START has been received,
                        !            while still addressed as SLV/REC or SLV/TRX.
                        ! ACTION   : No save of DATA, Enter NOT addressed SLV mode.
                        !            Recognition of own SLA. General call recognized, if S1ADR. 0–1.
                        !–––––––––––––––––––––––––––––––––––––––––––––––––––––––––––––
                        .sect      srsA0
                        .base      0x1a0

01A0   75D8C5                      mov   S1CON,#ENS1_NOTSTA_NOTSTO_NOTSI_AA_CR0
                                                                  ! clr  SI, set  AA
01A3   D0D0                        pop   psw
01A5   32                          reti


                        !*********************************************************************************************
                        !*********************************************************************************************
                        ! SLAVE TRANSMITTER STATE SERVICE ROUTINES
                        !*********************************************************************************************
                        !*********************************************************************************************

                        !–––––––––––––––––––––––––––––––––––––––––––––––––––––––––––––
                        ! STATE    : A8, Own SLA+R received, ACK returned.
                        ! ACTION   : DATA will be transmitted, A bit received.
                        !–––––––––––––––––––––––––––––––––––––––––––––––––––––––––––––
                        .sect      stsa8
                        .base      0x1a8

01A8   8548DA                      mov   S1DAT,STD                   ! load DATA in S1DAT
01AB   75D8C5                      mov   S1CON,#ENS1_NOTSTA_NOTSTO_NOTSI_AA_CR0
                                                                  ! clr  SI, set  AA
01AE   01E8                        ajmp  INITBASE2

                        .sect      ibase2
                        .base      0xe8
00E8   75D018           INITBASE2:         mov   psw,#SELRB3
00EB   7948                        mov   r1, #STD
00ED   09                          inc   r1
00EE   D0D0                        pop   psw
00F0   32                          reti

                        !–––––––––––––––––––––––––––––––––––––––––––––––––––––––––––––
                        ! STATE    : B0, Arbitration lost in SLA and R/W as MST.  Own SLA+R received, ACK returned.
                        ! ACTION   : DATA will be transmitted, A bit received.
                        !            STA is set to restart MST mode after the bus is free again.
                        !–––––––––––––––––––––––––––––––––––––––––––––––––––––––––––––
                        .sect      stsb0
                        .base      0x1b0

01B0   8548DA                      mov   S1DAT,STD                   ! load DATA in S1DAT
01B3   75D8E5                      mov   S1CON,#ENS1_STA_NOTSTO_NOTSI_AA_CR0
01B6   01E8                        ajmp  INITBASE2
```

```
                        !–––––––––––––––––––––––––––––––––––––––––––––––––––––––––––––
                        ! STATE    : B8, DATA has been transmitted, ACK received.
                        ! ACTION   : DATA will be transmitted, ACK bit is received.
                        !–––––––––––––––––––––––––––––––––––––––––––––––––––––––––––––
                        .sect      stsb8
                        .base      0x1b8
01B8    75D018                              mov   psw,#SELRB3
01BB    87DA                                mov   S1DAT,@r1
01BD    01F8                                ajmp  SCON

                        .sect      scn
                        .base      0xf8

00F8    75D8C5          SCON:               mov   S1CON,#ENS1_NOTSTA_NOTSTO_NOTSI_AA_CR0
                                                                          ! clr  SI, set  AA
00FB    09                                  inc   r1
00FC    D0D0                                pop   psw
00FE    32                                  reti
                        !–––––––––––––––––––––––––––––––––––––––––––––––––––––––––––––
                        ! STATE    : C0, DATA has been transmitted, NOT ACK received.
                        ! ACTION   : Enter not addressed SLV mode.
                        !–––––––––––––––––––––––––––––––––––––––––––––––––––––––––––––
                        .sect      stsc0
                        .base      0x1c0
01C0    75D8C5                              mov   S1CON,#ENS1_NOTSTA_NOTSTO_NOTSI_AA_CR0
                                                                          ! clr  SI, set  AA
01C3    D0D0                                pop   psw
01C5    32                                  reti

                        !–––––––––––––––––––––––––––––––––––––––––––––––––––––––––––––
                        ! STATE    : C8, Last DATA has been transmitted (AA=0), ACK received.
                        ! ACTION   : Enter not addressed SLV mode.
                        !–––––––––––––––––––––––––––––––––––––––––––––––––––––––––––––
                        .sect      stsc8
                        .base      0x1c8
01C8    75D8C5                              mov   S1CON,#ENS1_NOTSTA_NOTSTO_NOTSI_AA_CR0
                                                                          ! clr  SI, set  AA
01CB    D0D0                                pop   psw
01CD    32                                  reti


                        !*****************************************************************************************
                        !*****************************************************************************************
                        ! END OF SI01 INTERRUPT ROUTINE
                        !*****************************************************************************************
                        !*****************************************************************************************
```

ABSOLUTE MAXIMUM RATINGS[1, 2, 3]

PARAMETER	RATING	UNIT
Storage temperature range	–65 to +150	°C
Voltage on $\overline{EA}/V_{PP}$ to V_{SS}	–0.5 to +13	V
Voltage on any other pin to V_{SS}	–0.5 to +6.5	V
Input, output DC current on any single I/O pin	5.0	mA
Power dissipation (based on package heat transfer limitations, not device power consumption)	1.0	W

NOTES:
1. Stresses above those listed under Absolute Maximum Ratings may cause permanent damage to the device. This is a stress rating only and functional operation of the device at these or any conditions other than those described in the AC and DC Electrical Characteristics section of this specification is not implied.
2. This product includes circuitry specifically designed for the protection of its internal devices from the damaging effects of excessive static charge. Nonetheless, it is suggested that conventional precautions be taken to avoid applying greater than the rated maxima.
3. Parameters are valid over operating temperature range unless otherwise specified. All voltages are with respect to V_{SS} unless otherwise noted.

DEVICE SPECIFICATIONS

TYPE	SUPPLY VOLTAGE (V)		FREQUENCY (MHz)		TEMPERATURE RANGE (°C)
	MIN	MAX	MIN	MAX	
P87C554 SBxx versions	2.7	5.5	0	16	0 to +70
P87C554 SFxx versions	2.7	5.5	0	16	–40 to +85

DC ELECTRICAL CHARACTERISTICS

V_{SS}, AV_{SS} = 0 V

SYMBOL	PARAMETER	TEST CONDITIONS	LIMITS		UNIT
			MIN	MAX	
I_{DD}	Supply current operating	See notes 1 and 2 f_{OSC} = 16 MHz		16	mA
I_{ID}	Idle mode	See notes 1 and 3 f_{OSC} = 16 MHz		4	mA
I_{PD}	Power-down current	See notes 1 and 4; 2 V < V_{PD} < V_{DD} max		50	µA
Inputs					
V_{IL}	Input low voltage, except $\overline{EA}$, P1.6, P1.7		–0.5	0.2V_{DD}–0.1	V
V_{IL1}	Input low voltage to $\overline{EA}$		–0.5	0.2V_{DD}–0.3	V
V_{IL2}	Input low voltage to P1.6/SCL, P1.7/SDA[5]		–0.5	0.3V_{DD}	V
V_{IH}	Input high voltage, except XTAL1, RST		0.2V_{DD}+0.9	V_{DD}+0.5	V
V_{IH1}	Input high voltage, XTAL1, RST		0.7V_{DD}	V_{DD}+0.5	V
V_{IH2}	Input high voltage, P1.6/SCL, P1.7/SDA[5]		0.7V_{DD}	6.0	V
I_{IL}	Logical 0 input current, ports 1, 2, 3, 4, except P1.6, P1.7	V_{IN} = 0.45 V		–50	µA
I_{TL}	Logical 1-to-0 transition current, ports 1, 2, 3, 4, except P1.6, P1.7	See note 6		–650	µA
$\pm I_{IL1}$	Input leakage current, port 0, $\overline{EA}$, STADC, $\overline{EW}$	0.45 V < V_I < V_{DD}		10	µA
$\pm I_{IL2}$	Input leakage current, P1.6/SCL, P1.7/SDA	0 V < V_I < 6 V 0 V < V_{DD} < 5.5 V		10	µA
$\pm I_{IL3}$	Input leakage current, port 5	0.45 V < V_I < V_{DD}		1	µA
$\pm I_{IL4}$	Input leakage current, ports 1, 2, 3, 4 in high impedance mode	0.45 V < V_{in} < V_{DD}		10	µA
Outputs					
V_{OL}	Output low voltage, ports 1, 2, 3, 4, except P1.6, P1.7	I_{OL} = 1.6mA[7]		0.4	V
V_{OL1}	Output low voltage, port 0, ALE, $\overline{PSEN}$, $\overline{PWM0}$, $\overline{PWM1}$	I_{OL} = 3.2mA[7]		0.4	V
V_{OL2}	Output low voltage, P1.6/SCL, P1.7/SDA	I_{OL} = 3.0mA[7]		0.4	V
V_{OH}	Output high voltage, ports 1, 2, 3, 4, except P1.6/SCL, P1.7/SDA	V_{CC} = 2.7 V I_{OH} = –20 µA	V_{CC} – 0.7		V
		V_{CC} = 4.5 I_{OH} = –30 µA	V_{CC} – 0.7		V
V_{OH1}	Output high voltage (port 0 in external bus mode, ALE, $\overline{PSEN}$, $\overline{PWM0}$, $\overline{PWM1}$)[8]	V_{CC} = 2.7 V I_{OH} = –3.2mA	V_{CC} – 0.7		V
V_{OH2}	Output high voltage (RST)	–I_{OH} = 400 µA –I_{OH} = 120 µA	2.4 0.8V_{DD}		V V
R_{RST}	Internal reset pull-down resistor		40	225	kΩ
C_{IO}	Pin capacitance	Test freq = 1 MHz, T_{amb} = 25°C		10	pF
Analog Inputs					
AV_{DD}	Analog supply voltage: 87C554[9]	AV_{DD} = V_{DD}±0.2 V	2.7	5.5	V
AI_{DD}	Analog supply current: operating:	Port 5 = 0 to AV_{DD}		1.2	mA
AI_{ID}	Idle mode: 87C554			50	µA
AI_{PD}	Power-down mode: 87C554	2 V < AV_{PD} < AV_{DD} max		50	µA

DC ELECTRICAL CHARACTERISTICS (Continued)

SYMBOL	PARAMETER	TEST CONDITIONS	LIMITS MIN	LIMITS MAX	UNIT
Analog Inputs (Continued)					
AV_{IN}	Analog input voltage		AV_{SS}–0.2	AV_{DD}+0.2	V
AV_{REF}	Reference voltage: AV_{REF-} AV_{REF+}		 AV_{SS}–0.2		 V V
R_{REF}	Resistance between AV_{REF+} and AV_{REF-}		10	50	kΩ
C_{IA}	Analog input capacitance			15	pF
t_{ADS}	Sampling time (10 bit mode)			$8t_{CY}$	µs
t_{ADS8}	Sampling time (8 bit mode)			$5t_{CY}$	µs
t_{ADC}	Conversion time (including sampling time, 10 bit mode)			$50t_{CY}$	µs
t_{ADC8}	Conversion time (including sampling time, 8 bit mode)			$24t_{CY}$	µs
DL_e	Differential non-linearity[10, 11, 12]			±1	LSB
IL_e	Integral non-linearity[10, 13] (10 bit mode)			±2	LSB
IL_{e8}	Integral non-linearity (8 bit mode)			±1	LSB
OS_e	Offset error[10, 14] (10 bit mode)			±2	LSB
OS_{e8}	Offset error (8 bit mode)			±1	LSB
G_e	Gain error[10, 15]			±0.4	%
A_e	Absolute voltage error[10, 16]			±3	LSB
M_{CTC}	Channel to channel matching			±1	LSB
C_t	Crosstalk between inputs of port 5[17, 18]	0–100kHz		–60	dB

NOTES FOR DC ELECTRICAL CHARACTERISTICS:

1. See Figures 57 through 61 for I_{DD} test conditions.
2. The operating supply current is measured with all output pins disconnected; XTAL1 driven with $t_r = t_f = 10ns$; $V_{IL} = V_{SS} + 0.5$ V; $V_{IH} = V_{DD} – 0.5$ V; XTAL2 not connected; $\overline{EA}$ = RST = Port 0 = $\overline{EW} = V_{DD}$; STADC = V_{SS}.
3. The idle mode supply current is measured with all output pins disconnected; XTAL1 driven with $t_r = t_f = 10ns$; $V_{IL} = V_{SS} + 0.5$ V; $V_{IH} = V_{DD} – 0.5$ V; XTAL2 not connected; Port 0 = $\overline{EW} = V_{DD}$; $\overline{EA}$ = RST = STADC = V_{SS}.
4. The power-down current is measured with all output pins disconnected; XTAL2 not connected; Port 0 = $\overline{EW} = V_{DD}$; $\overline{EA}$ = RST = STADC = XTAL1 = V_{SS}.
5. The input threshold voltage of P1.6 and P1.7 (SIO1) meets the I^{2}C specification, so an input voltage below 1.5 V will be recognized as a logic 0 while an input voltage above 3.0 V will be recognized as a logic 1.
6. Pins of ports 1 (except P1.6, P1.7), 2, 3, and 4 source a transition current when they are being externally driven from 1 to 0. The transition current reaches its maximum value when V_{IN} is approximately 2 V.
7. Capacitive loading on ports 0 and 2 may cause spurious noise to be superimposed on the V_{OL}s of ALE and ports 1 and 3. The noise is due to external bus capacitance discharging into the port 0 and port 2 pins when these pins make 1-to-0 transitions during bus operations. In the worst cases (capacitive loading > 100pF), the noise pulse on the ALE pin may exceed 0.8 V. In such cases, it may be desirable to qualify ALE with a Schmitt Trigger, or use an address latch with a Schmitt Trigger STROBE input. I_{OL} can exceed these conditions provided that no single output sinks more than 5mA and no more than two outputs exceed the test conditions.
8. Capacitive loading on ports 0 and 2 may cause the V_{OH} on ALE and $\overline{PSEN}$ to momentarily fall below the 0.9 V_{DD} specification when the address bits are stabilizing.
9. The following condition must not be exceeded: $V_{DD} – 0.2$ V < AV_{DD} < $V_{DD} + 0.2$ V.
10. Conditions: AV_{REF-} = 0 V; AV_{DD} = 5.0 V. Measurement by continuous conversion of AV_{IN} = –20mV to 5.12 V in steps of 0.5mV, derivating parameters from collected conversion results of ADC. AV_{REF+} (87C554) = 4.977 V. ADC is monotonic with no missing codes.
11. The differential non-linearity (DL_e) is the difference between the actual step width and the ideal step width. (See Figure 48.)
12. The ADC is monotonic; there are no missing codes.
13. The integral non-linearity (IL_e) is the peak difference between the center of the steps of the actual and the ideal transfer curve after appropriate adjustment of gain and offset error. (See Figure 48.)
14. The offset error (OS_e) is the absolute difference between the straight line which fits the actual transfer curve (after removing gain error), and a straight line which fits the ideal transfer curve. (See Figure 48.)
15. The gain error (G_e) is the relative difference in percent between the straight line fitting the actual transfer curve (after removing offset error), and the straight line which fits the ideal transfer curve. Gain error is constant at every point on the transfer curve. (See Figure 48.)
16. The absolute voltage error (A_e) is the maximum difference between the center of the steps of the actual transfer curve of the non-calibrated ADC and the ideal transfer curve.
17. This should be considered when both analog and digital signals are simultaneously input to port 5.
18. This parameter is guaranteed by design and characterized, but is not production tested.

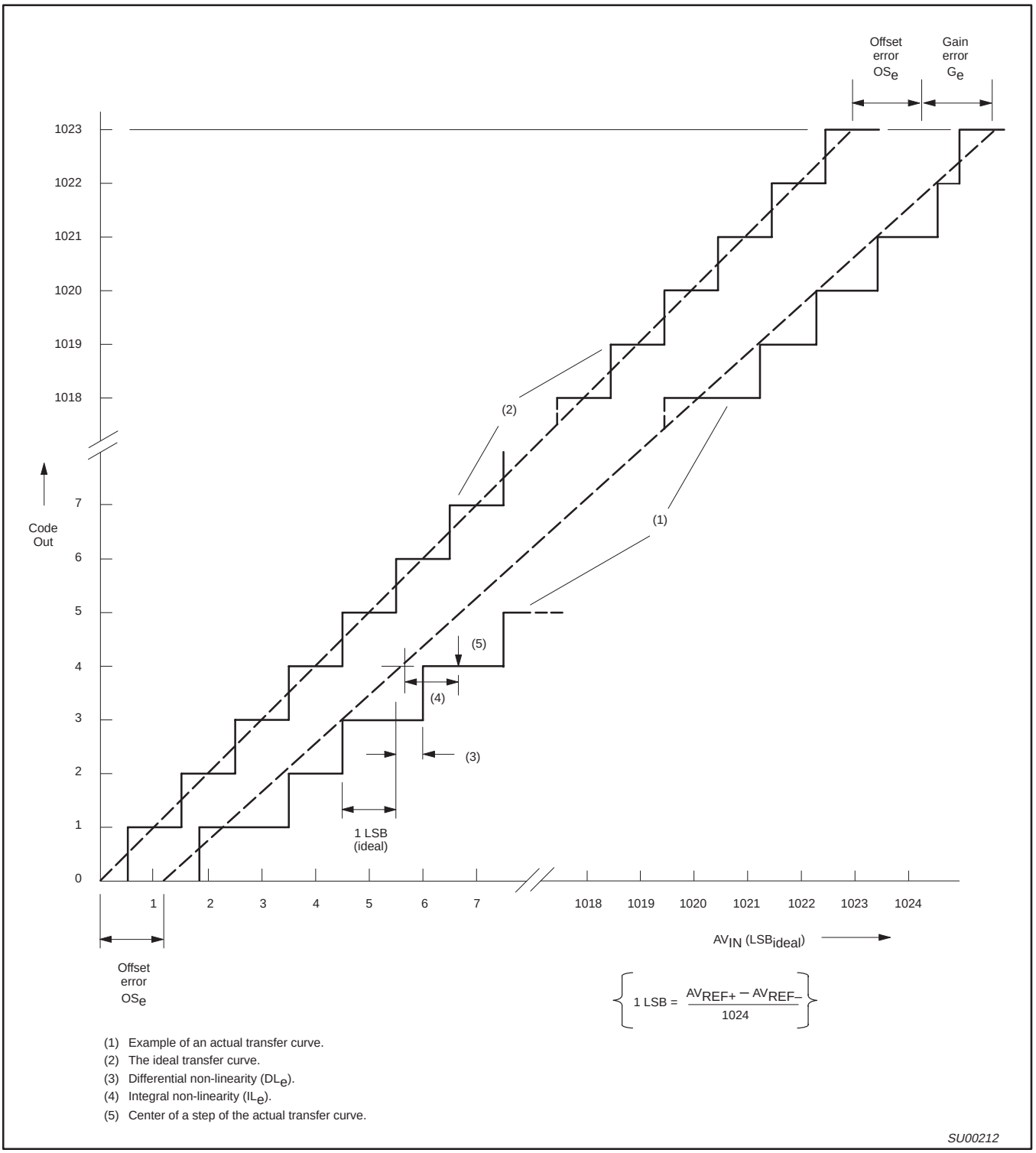

Figure 48. ADC Conversion Characteristic

AC ELECTRICAL CHARACTERISTICS

SYMBOL	FIGURE	PARAMETER	16 MHz CLOCK		VARIABLE CLOCK		UNIT
			MIN	MAX	MIN	MAX	
$1/t_{CLCL}$	49	Oscillator frequency[5] Speed versions : 4; 5;S			3.5	16	MHz
t_{LHLL}	49	ALE pulse width	85		$2t_{CLCL}$–40		ns
t_{AVLL}	49	Address valid to ALE low	22		t_{CLCL}–40		ns
t_{LLAX}	49	Address hold after ALE low	32		t_{CLCL}–30		ns
t_{LLIV}	49	ALE low to valid instruction in		150		$4t_{CLCL}$–100	ns
t_{LLPL}	49	ALE low to $\overline{PSEN}$ low	32		t_{CLCL}–30		ns
t_{PLPH}	49	$\overline{PSEN}$ pulse width	142		$3t_{CLCL}$–45		ns
t_{PLIV}	49	$\overline{PSEN}$ low to valid instruction in		82		$3t_{CLCL}$–105	ns
t_{PXIX}	49	Input instruction hold after $\overline{PSEN}$	0		0		ns
t_{PXIZ}	49	Input instruction float after $\overline{PSEN}$		37		t_{CLCL}–25	ns
t_{AVIV}[5]	49	Address to valid instruction in		207		$5t_{CLCL}$–105	ns
t_{PLAZ}	49	$\overline{PSEN}$ low to address float		10		10	ns
Data Memory							
t_{RLRH}	50, 51	$\overline{RD}$ pulse width	275		$6t_{CLCL}$–100		ns
t_{WLWH}	50, 51	$\overline{WR}$ pulse width	275		$6t_{CLCL}$–100		ns
t_{RLDV}	50, 51	$\overline{RD}$ low to valid data in		147		$5t_{CLCL}$–165	ns
t_{RHDX}	50, 51	Data hold after $\overline{RD}$	0		0		ns
t_{RHDZ}	50, 51	Data float after $\overline{RD}$		65		$2t_{CLCL}$–60	ns
t_{LLDV}	50, 51	ALE low to valid data in		350		$8t_{CLCL}$–150	ns
t_{AVDV}	50, 51	Address to valid data in		397		$9t_{CLCL}$–165	ns
t_{LLWL}	50, 51	ALE low to $\overline{RD}$ or $\overline{WR}$ low	137	239	$3t_{CLCL}$–50	$3t_{CLCL}$+50	ns
t_{AVWL}	50, 51	Address valid to $\overline{WR}$ low or $\overline{RD}$ low	122		$4t_{CLCL}$–130		ns
t_{QVWX}	50, 51	Data valid to $\overline{WR}$ transition	13		t_{CLCL}–50		ns
t_{WHQX}	50, 51	Data hold after $\overline{WR}$	13		t_{CLCL}–50		ns
t_{QVWH}	51	Data valid to $\overline{WR}$ high	287		$7t_{CLCL}$–150		ns
t_{RLAZ}	50, 51	$\overline{RD}$ low to address float		0		0	ns
t_{WHLH}	50, 51	$\overline{RD}$ or $\overline{WR}$ high to ALE high	23	103	t_{CLCL}–40	t_{CLCL}+40	ns
External Clock							
t_{CHCX}	52	High time	20		20	t_{CLCL}–t_{CLCX}	ns
t_{CLCX}	52	Low time	20		20	t_{CLCL}–t_{CHCX}	ns
t_{CLCH}	52	Rise time		20		20	ns
t_{CHCL}	52	Fall time		20		20	ns
Shift Register							
t_{XLXL}	53	Serial port clock cycle time	750		$12t_{CLCL}$		ns
t_{QVXH}	53	Output data setup to clock rising edge	492		$10t_{CLCL}$–133		ns
t_{XHQX}	53	Output data hold after clock rising edge	8		$2t_{CLCL}$–117		ns
t_{XHDX}	53	Input data hold after clock rising edge	0		0		ns
t_{XHDV}	53	Clock rising edge to input data valid		492		$10t_{CLCL}$–133	ns

NOTES:
1. Parameters are valid over operating temperature range unless otherwise specified.
2. Load capacitance for port 0, ALE, and $\overline{PSEN}$ = 100pF, load capacitance for all other outputs = 80pF.
3. Interfacing the microcontroller to devices with float times up to 45ns is permitted. This limited bus contention will not cause damage to Port 0 drivers.
4. See application note AN457 for external memory interface.
5. Parts are guaranteed to operate down to 0Hz.

AC ELECTRICAL CHARACTERISTICS (Continued)

SYMBOL	PARAMETER	INPUT	OUTPUT
I^{2}C Interface (Refer to Figure 56)[5]			
$t_{HD;STA}$	START condition hold time	≥ 14 t_{CLCL}	> 4.0 µs [1]
t_{LOW}	SCL low time	≥ 16 t_{CLCL}	> 4.7 µs [1]
t_{HIGH}	SCL high time	≥ 14 t_{CLCL}	> 4.0 µs [1]
t_{RC}	SCL rise time	≤ 1 µs	– [2]
t_{FC}	SCL fall time	≤ 0.3 µs	< 0.3 µs [3]
$t_{SU;DAT1}$	Data set-up time	≥ 250ns	> 20 t_{CLCL} – t_{RD}
$t_{SU;DAT2}$	SDA set-up time (before rep. START cond.)	≥ 250ns	> 1 µs [1]
$t_{SU;DAT3}$	SDA set-up time (before STOP cond.)	≥ 250ns	> 8 t_{CLCL}
$t_{HD;DAT}$	Data hold time	≥ 0ns	> 8 t_{CLCL} – t_{FC}
$t_{SU;STA}$	Repeated START set-up time	≥ 14 t_{CLCL}	> 4.7 µs [1]
$t_{SU;STO}$	STOP condition set-up time	≥ 14 t_{CLCL}	> 4.0 µs [1]
t_{BUF}	Bus free time	≥ 14 t_{CLCL}	> 4.7 µs [1]
t_{RD}	SDA rise time	≤ 1 µs	– [2]
t_{FD}	SDA fall time	≤ 0.3 µs	< 0.3 µs [3]

NOTES:
1. At 100 kbit/s. At other bit rates this value is inversely proportional to the bit-rate of 100 kbit/s.
2. Determined by the external bus-line capacitance and the external bus-line pull-resistor, this must be < 1 µs.
3. Spikes on the SDA and SCL lines with a duration of less than 3 t_{CLCL} will be filtered out. Maximum capacitance on bus-lines SDA and SCL = 400pF.
4. $t_{CLCL} = 1/f_{OSC}$ = one oscillator clock period at pin XTAL1. For 62ns (42s) < t_{CLCL} < 285ns (16 MHz (24Hz) > f_{OSC} > 3.5 MHz) the SI01 interface meets the I^{2}C-bus specification for bit-rates up to 100 kbit/s.
5. These values are guaranteed but not 100% production tested.

EXPLANATION OF THE AC SYMBOLS

Each timing symbol has five characters. The first character is always 't' (= time). The other characters, depending on their positions, indicate the name of a signal or the logical status of that signal. The designations are:

A – Address
C – Clock
D – Input data
H – Logic level high
I – Instruction (program memory contents)
L – Logic level low, or ALE
P – $\overline{PSEN}$
Q – Output data
R – $\overline{RD}$ signal
t – Time
V – Valid
W – $\overline{WR}$ signal
X – No longer a valid logic level
Z – Float

Examples: t_{AVLL} = Time for address valid to ALE low.
t_{LLPL} = Time for ALE low to $\overline{PSEN}$ low.

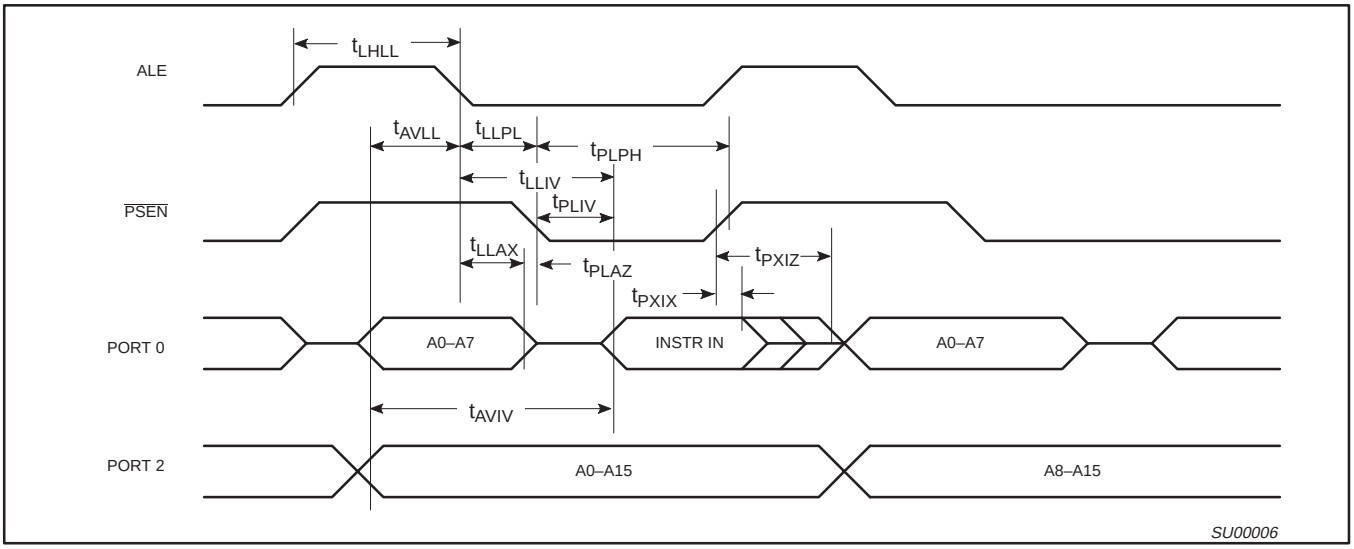

Figure 49. External Program Memory Read Cycle

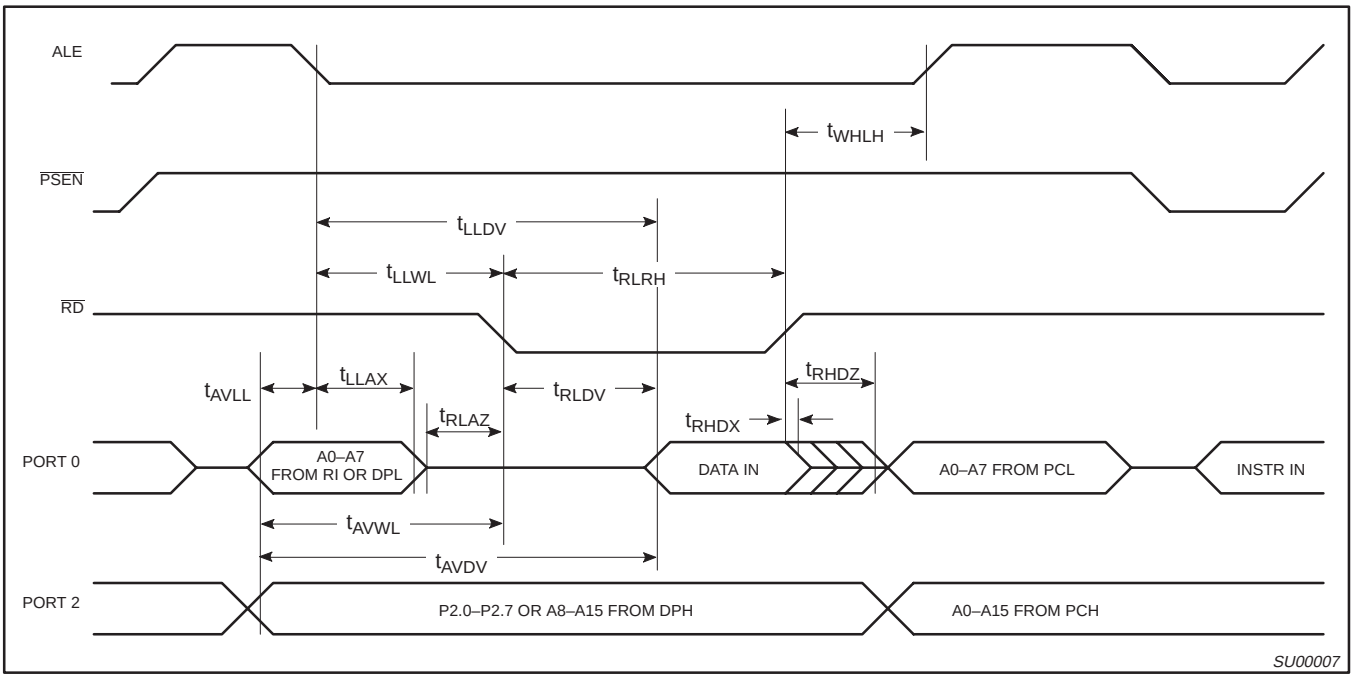

Figure 50. External Data Memory Read Cycle

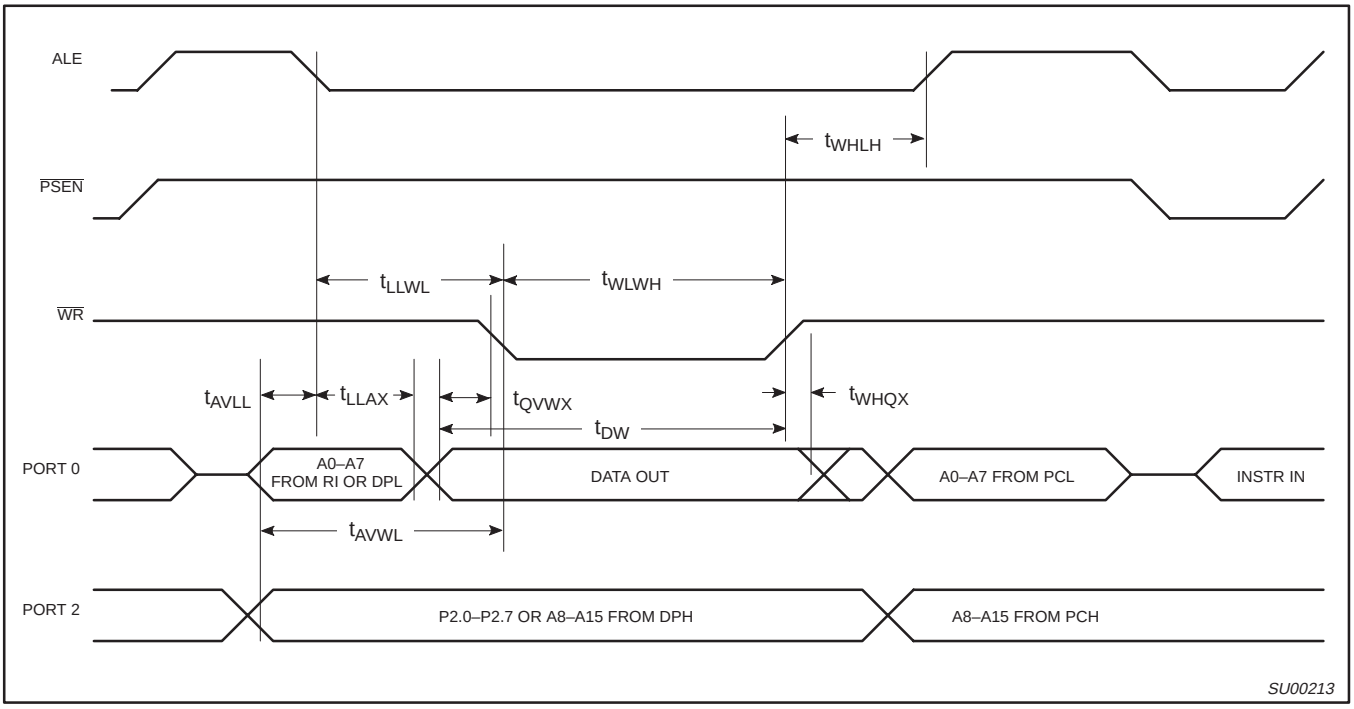

Figure 51. External Data Memory Write Cycle

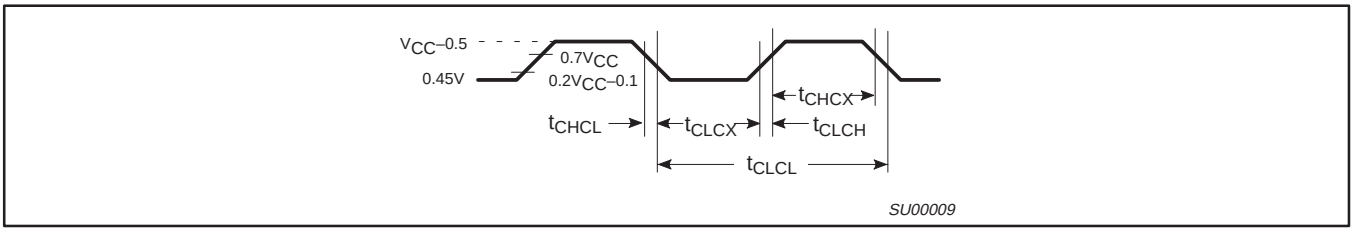

Figure 52. External Clock Drive XTAL1

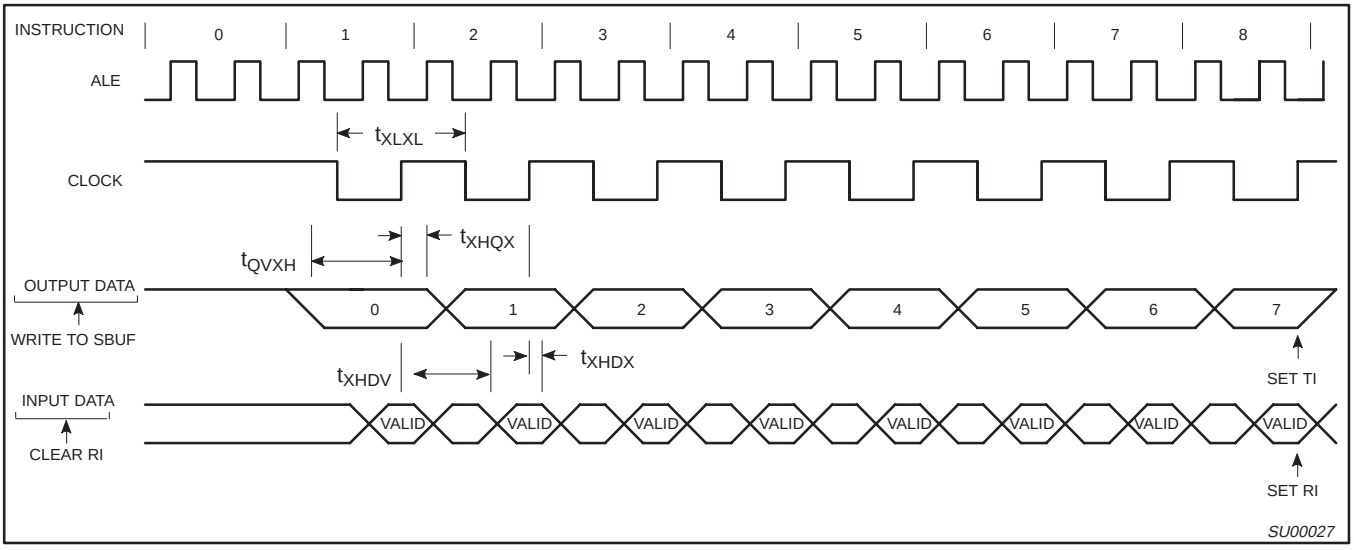

Figure 53. Shift Register Mode Timing

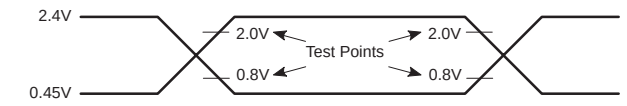

NOTE:
AC inputs during testing are driven at 2.4V for a logic '1' and 0.45V for a logic '0'.
Timing measurements are made at 2.0V for a logic '1' and 0.8V for a logic '0'.

SU00215

Figure 54. AC Testing Input/Output

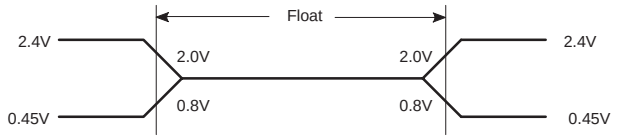

NOTE:
The float state is defined as the point at which a port 0 pin sinks 3.2mA or sources 400µA at the voltage test levels.

SU00216

Figure 55. AC Testing Input, Float Waveform

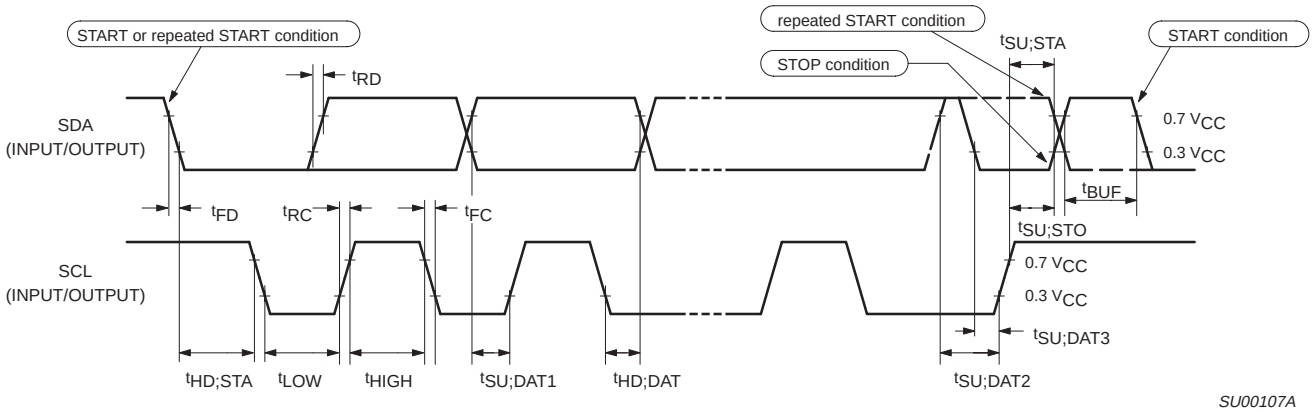

SU00107A

Figure 56. Timing SIO1 (I^{2}C) Interface

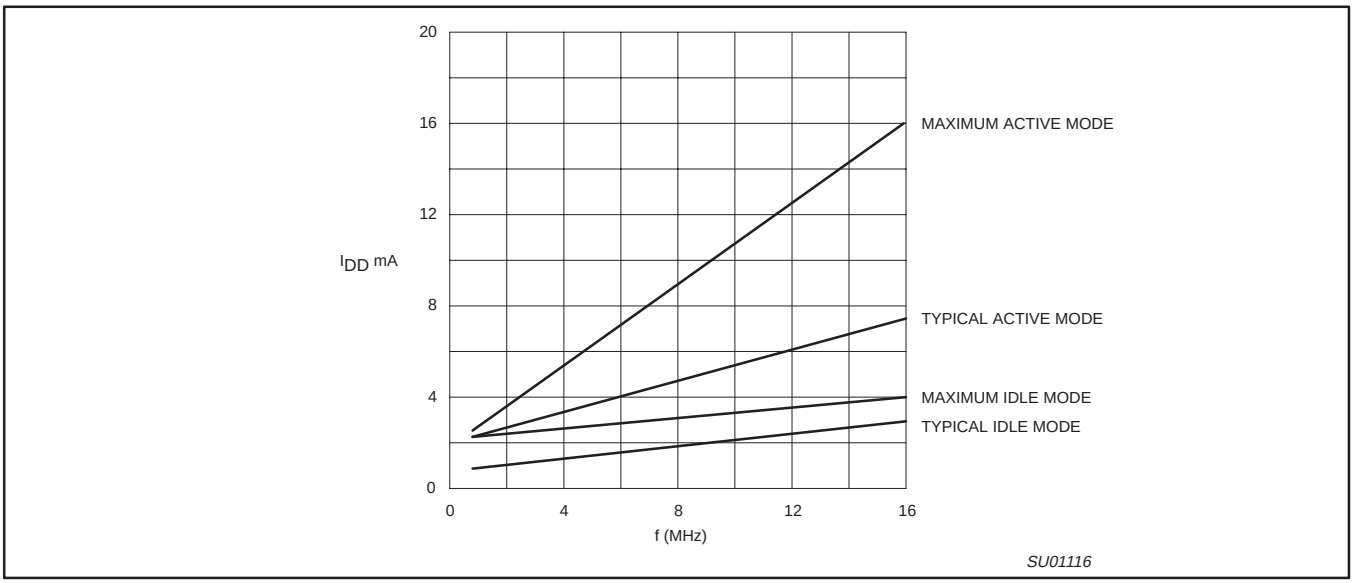

Figure 57. 16 MHz Version Supply Current (I_{DD}) as a Function of Frequency at XTAL1 (f_{OSC})

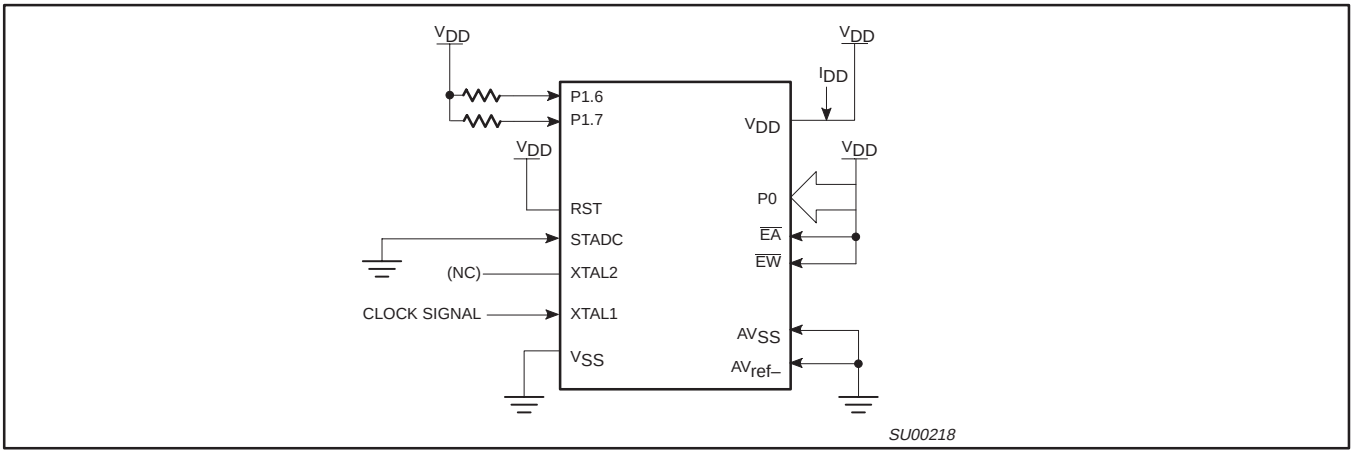

Figure 58. I_{DD} Test Condition, Active Mode
All other pins are disconnected[1]

1. Active Mode:
   a. The following pins must be forced to V_{DD}: $\overline{EA}$, RST, Port 0, and $\overline{EW}$.
   b. The following pins must be forced to V_{SS}: STADC, AV_{ss}, and AV_{ref-}.
   c. Ports 1.6 and 1.7 should be connected to V_{DD} through resistors of sufficiently high value such that the sink current into these pins cannot exceed the I_{OL1} spec of these pins.
   d. The following pins must be disconnected: XTAL2 and all pins not specified above.

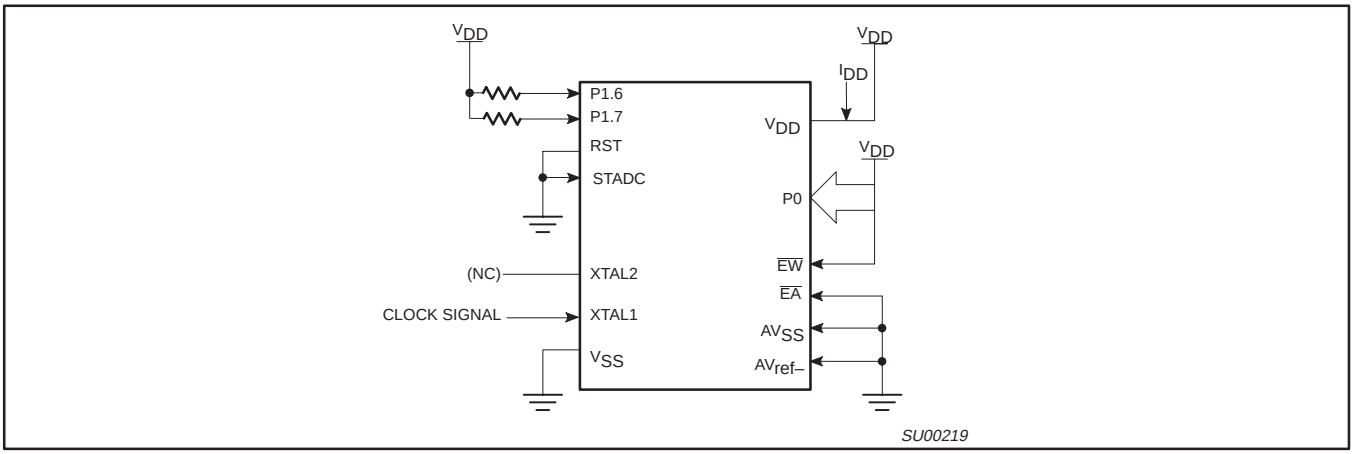

Figure 59. I_{DD} Test Condition, Idle Mode
All other pins are disconnected[2]

2. Idle Mode:
   a. The following pins must be forced to V_{DD}: Port 0 and $\overline{EW}$.
   b. The following pins must be forced to V_{SS}: RST, STADC, AV_{ss}, AV_{ref-}, and $\overline{EA}$.
   c. Ports 1.6 and 1.7 should be connected to V_{DD} through resistors of sufficiently high value such that the sink current into these pins cannot exceed the I_{OL1} spec of these pins. These pins must not have logic 0 written to them prior to this measurement.
   d. The following pins must be disconnected: XTAL2 and all pins not specified above.

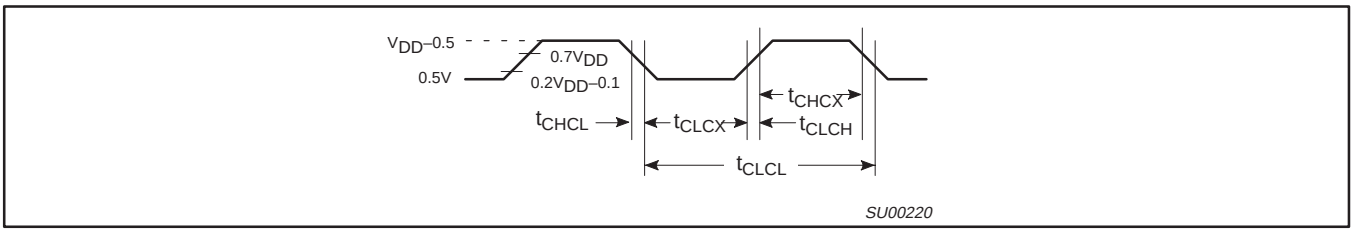

Figure 60. Clock Signal Waveform for I_{DD} Tests in Active and Idle Modes
$t_{CLCH} = t_{CHCL} = 5ns$

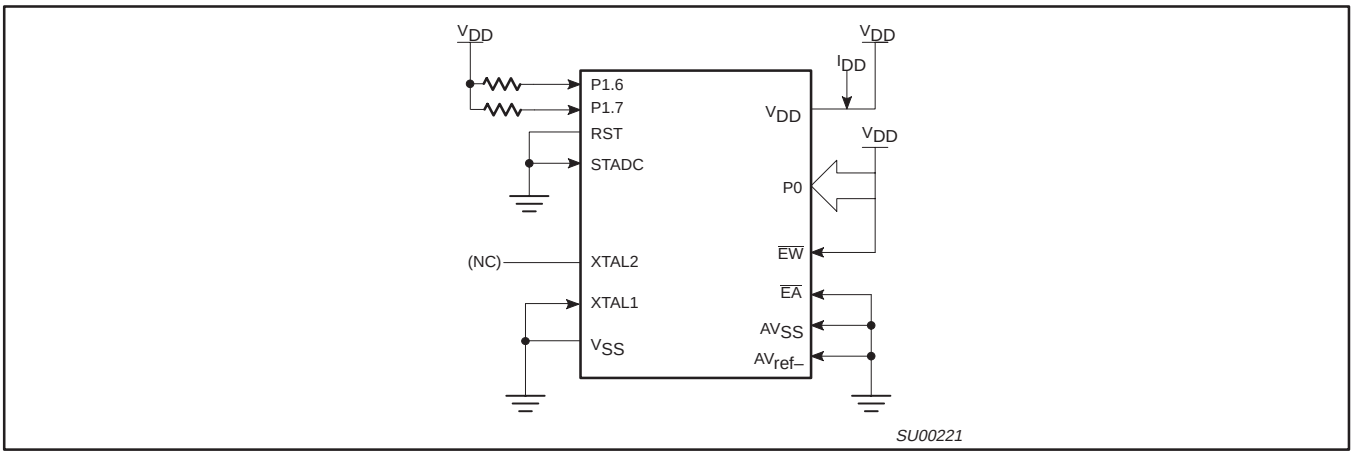

Figure 61. I_{DD} Test Condition, Power Down Mode
All other pins are disconnected. V_{DD} = 2 V to 5.5 V[3]

3. Power Down Mode:
   a. The following pins must be forced to V_{DD}: Port 0 and $\overline{EW}$.
   b. The following pins must be forced to V_{SS}: RST, STADC, XTAL1, AV_{ss}, AV_{ref-}, and $\overline{EA}$.
   c. Ports 1.6 and 1.7 should be connected to V_{DD} through resistors of sufficiently high value such that the sink current into these pins cannot exceed the I_{OL1} spec of these pins. These pins must not have logic 0 written to them prior to this measurement.
   d. The following pins must be disconnected: XTAL2 and all pins not specified above.

EPROM CHARACTERISTICS

The 87C554 contains three signature bytes that can be read and used by an EPROM programming system to identify the device. The signature bytes identify the device as an 87C554 manufactured by Philips:

(030H) = 15H indicates manufactured by Philips Components
(031H) = 93H indicates 87C554
(60H) = 01H

Program Verification

If security bits 2 or 3 have not been programmed, the on-chip program memory can be read out for program verification.

If the encryption table has been programmed, the data presented at port 0 will be the exclusive NOR of the program byte with one of the encryption bytes. The user will have to know the encryption table contents in order to correctly decode the verification data. The encryption table itself cannot be read out.

Security Bits

With none of the security bits programmed the code in the program memory can be verified. If the encryption table is programmed, the code will be encrypted when verified. When only security bit 1 (see Table 11) is programmed, MOVC instructions executed from external program memory are disabled from fetching code bytes from the internal memory, $\overline{EA}$ is latched on Reset and all further programming of the EPROM is disabled. When security bits 1 and 2 are programmed, in addition to the above, verify mode is disabled.

When all three security bits are programmed, all of the conditions above apply and all external program memory execution is disabled.

Table 11. Program Security Bits for EPROM Devices

PROGRAM LOCK BITS[1, 2]				
	SB1	SB2	SB3	PROTECTION DESCRIPTION
1	U	U	U	No Program Security features enabled. (Code verify will still be encrypted by the Encryption Array if programmed.)
2	P	U	U	MOVC instructions executed from external program memory are disabled from fetching code bytes from internal memory, $\overline{EA}$ is sampled and latched on Reset, and further programming of the EPROM is disabled.
3	P	P	U	Same as 2, also verify is disabled.
4	P	P	P	Same as 3, external execution is disabled.

NOTES:
1. P – programmed. U – unprogrammed.
2. Any other combination of the security bits is not defined.

PLCC68: plastic leaded chip carrier; 68 leads; pedestal SOT188-3

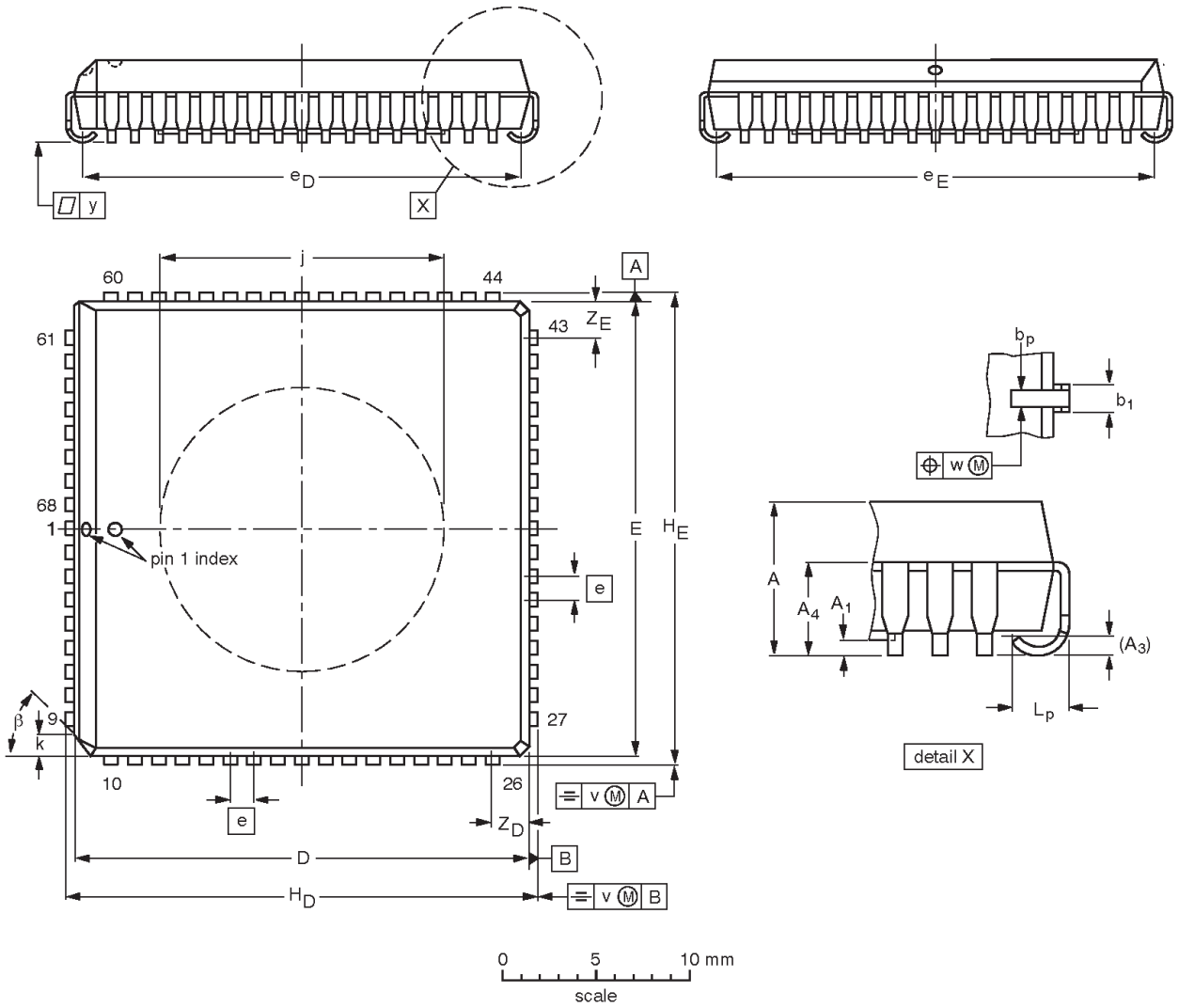

DIMENSIONS (mm dimensions are derived from the original inch dimensions)

UNIT	A	A_1 min.	A_3	A_4 max.	b_p	b_1	D(1)	E(1)	e	e_D	e_E	H_D	H_E	j	k	L_p	v	w	y	Z_D(1) max.	Z_E(1) max.	β
mm	4.57 4.19	0.13	0.25	3.05	0.53 0.33	0.81 0.66	24.33 24.13	24.33 24.13	1.27	23.62 22.61	23.62 22.61	25.27 25.02	25.27 25.02	15.34 15.19	1.22 1.07	1.44 1.02	0.18	0.18	0.1	2.06	2.06	45°
inches	0.180 0.165	0.005	0.01	0.12	0.021 0.013	0.032 0.026	0.958 0.950	0.958 0.950	0.05	0.93 0.89	0.93 0.89	0.995 0.985	0.995 0.985	0.604 0.598	0.048 0.042	0.057 0.040	0.007	0.007	0.004	0.081	0.081	

Note

1. Plastic or metal protrusions of 0.25 mm (0.01 inch) maximum per side are not included.

OUTLINE VERSION	REFERENCES				EUROPEAN PROJECTION	ISSUE DATE
	IEC	JEDEC	JEITA			
SOT188-3	112E10	MO-047	- - -			~~99-12-27~~ 01-11-14

REVISION HISTORY

Date	CPCN	Description
2002 Mar 25	9397 750 09572	– PQFP package details removed – References to non-OTP versions removed
1998 Aug 14	9397 750 04273	Previous release

80C51 8-bit microcontroller – 12 clock operation
16K/512 OTP/RAM, 8 channel 10-bit A/D, I^{2}C, PWM, capture/compare, high I/O

P87C554

Purchase of Philips I^{2}C components conveys a license under the Philips' I^{2}C patent to use the components in the I^{2}C system provided the system conforms to the I^{2}C specifications defined by Philips. This specification can be ordered using the code 9398 393 40011.

Data sheet status

Data sheet status [1]	Product status [2]	Definitions
Objective data	Development	This data sheet contains data from the objective specification for product development. Philips Semiconductors reserves the right to change the specification in any manner without notice.
Preliminary data	Qualification	This data sheet contains data from the preliminary specification. Supplementary data will be published at a later date. Philips Semiconductors reserves the right to change the specification without notice, in order to improve the design and supply the best possible product.
Product data	Production	This data sheet contains data from the product specification. Philips Semiconductors reserves the right to make changes at any time in order to improve the design, manufacturing and supply. Changes will be communicated according to the Customer Product/Process Change Notification (CPCN) procedure SNW-SQ-650A.

[1] Please consult the most recently issued data sheet before initiating or completing a design.

[2] The product status of the device(s) described in this data sheet may have changed since this data sheet was published. The latest information is available on the Internet at URL http://www.semiconductors.philips.com.

Definitions

Short-form specification — The data in a short-form specification is extracted from a full data sheet with the same type number and title. For detailed information see the relevant data sheet or data handbook.

Limiting values definition — Limiting values given are in accordance with the Absolute Maximum Rating System (IEC 60134). Stress above one or more of the limiting values may cause permanent damage to the device. These are stress ratings only and operation of the device at these or at any other conditions above those given in the Characteristics sections of the specification is not implied. Exposure to limiting values for extended periods may affect device reliability.

Application information — Applications that are described herein for any of these products are for illustrative purposes only. Philips Semiconductors make no representation or warranty that such applications will be suitable for the specified use without further testing or modification.

Disclaimers

Life support — These products are not designed for use in life support appliances, devices or systems where malfunction of these products can reasonably be expected to result in personal injury. Philips Semiconductors customers using or selling these products for use in such applications do so at their own risk and agree to fully indemnify Philips Semiconductors for any damages resulting from such application.

Right to make changes — Philips Semiconductors reserves the right to make changes, without notice, in the products, including circuits, standard cells, and/or software, described or contained herein in order to improve design and/or performance. Philips Semiconductors assumes no responsibility or liability for the use of any of these products, conveys no license or title under any patent, copyright, or mask work right to these products, and makes no representations or warranties that these products are free from patent, copyright, or mask work right infringement, unless otherwise specified.

Contact information

For additional information please visit
http://www.semiconductors.philips.com. Fax: **+31 40 27 24825**

For sales offices addresses send e-mail to:
sales.addresses@www.semiconductors.philips.com.

© Koninklijke Philips Electronics N.V. 2002
All rights reserved. Printed in U.S.A.

Date of release: 03-02

Document order number: 9397 750 09572

Let's make things better.

Philips Semiconductors

PHILIPS