ANTREX Electronics

Electronic Components Sourcing Information

Product Reference Information

Part Number:	MCP3021A4T-E/OT
Manufacturer:	Microchip Technology
Package:	SC-74A, SOT-753
Availability:	Please confirm with sales

Product Page:

https://antrexco.com/product/details/microchip-technology/mcp3021a4t-e-ot.html

Scan for product page

Request a Quote:

Submit RFQ for this part

Contact Information

Email: info@antrexco.com

WhatsApp: +86-186-8066-5326

Website: https://antrexco.com

Quality & Trust

New & Original Components

Supplier verification and packaging condition review

CoC / RoHS / REACH documents available on request

Secure sourcing support for OEM / EMS projects

Note:

This PDF includes an ANTREX product reference cover page.

The original manufacturer datasheet follows from the next page.

MCP3021

Low-Power 10-Bit A/D Converter with I^{2}C Interface

Features

- 10-bit Resolution
- ±1 LSB DNL, ±1 LSB INL maximum
- 250 µA Max Conversion Current
- 5 nA Typical Standby Current, 1 µA maximum
- I^{2}C Compatible Serial Interface
  - 100 kHz I^{2}C Standard mode
  - 400 kHz I^{2}C Fast mode
- Up to 8 Devices on a Single 2-wire Bus
- 22.3 ksps in I^{2}C Fast mode
- Single-Ended Analog Input Channel
- On-Chip Sample and Hold
- On-Chip Conversion Clock
- Single-Supply Specified Operation: 2.7V to 5.5V
- Temperature Range:
  - Extended: -40°C to +125°C
- Small SOT-23-5 Package

Applications

- Data Logging
- Multi-Zone Monitoring
- Handheld Portable Applications
- Battery-Powered Test Equipment
- Remote or Isolated Data Acquisition

General Description

Microchip's MCP3021 is a successive approximation A/D converter (ADC) with a 10-bit resolution. Available in the SOT-23 package, this device provides one single-ended input with very low-power consumption. Based on an advanced CMOS technology, the MCP3021 provides a low maximum conversion current and standby current of 250 µA and 1 µA, respectively. Low-current consumption, combined with the small SOT-23 package, make this device ideal for battery-powered and remote data acquisition applications.

Communication to the MCP3021 is performed using a 2-wire I^{2}C compatible interface. Standard (100 kHz) and Fast (400 kHz) I^{2}C modes are available with the device. An on-chip conversion clock enables independent timing for the I^{2}C and conversion clocks. The device is also addressable, allowing up to eight devices on a single 2-wire bus.

The MCP3021 runs on a single-supply voltage that operates over a broad range of 2.7V to 5.5V. This device also provides excellent linearity of ±1 LSB differential nonlinearity (DNL) and ±1 LSB integral nonlinearity (INL), maximum.

Package Type

5-Pin SOT-23

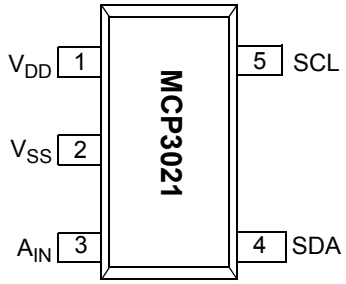

© 2003-2017 Microchip Technology Inc.

Functional Block Diagram

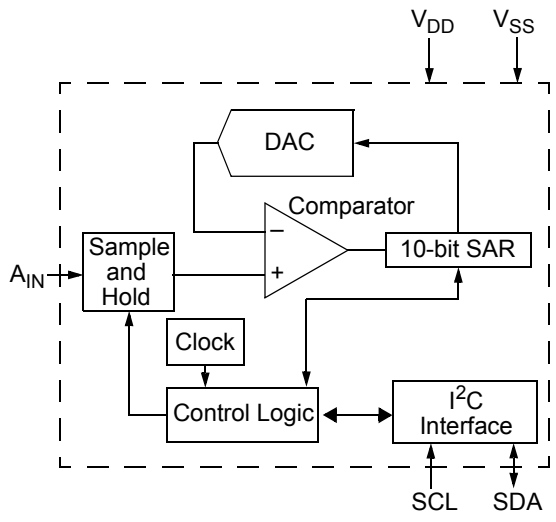

© 2003-2017 Microchip Technology Inc.

1.0 ELECTRICAL CHARACTERISTICS

Absolute Maximum Ratings †

V_{DD} ..... +7.0V
Analog input pin w.r.t. V_{SS} ..... -0.6V to V_{DD} +0.6V
SDA and SCL pins w.r.t. V_{SS} ..... -0.6V to V_{DD} +1.0V
Storage Temperature ..... -65°C to +150°C
Ambient Temperature with power applied ..... -65°C to +125°C
Maximum Junction Temperature ..... +150°C
ESD protection on all pins (HBM) ..... ≥ 4 kV

† Notice: Stresses above those listed under "Absolute Maximum Ratings" may cause permanent damage to the device. This is a stress rating only and functional operation of the device at those or any other conditions above those indicated in the operational listings of this specification is not intended. Exposure to maximum rating conditions for extended periods may affect device reliability.

DC ELECTRICAL SPECIFICATIONS

Electrical Characteristics: Unless otherwise noted, all parameters apply at V_{DD} = 5.0V, V_{SS} = GND, R_{PU} = 2 kΩ T_A = -40°C to +85°C, I^2C Fast Mode Timing: f_{SCL} = 400 kHz (**Note 3**).

Parameter	Sym.	Min.	Typ.	Max.	Units	Conditions
DC Accuracy						
Resolution	—		10		bits	
Integral Nonlinearity	INL	—	±0.25	±1	LSB	
Differential Nonlinearity	DNL	—	±0.25	±1	LSB	No missing codes
Offset Error	—	—	±0.75	±3	LSB	
Gain Error	—	—	-1	±3	LSB	
Dynamic Performance						
Total Harmonic Distortion	THD	—	-70	—	dB	V_{IN} = 0.1V to 4.9V @ 1 kHz
Signal-to-Noise and Distortion	SINAD	—	60	—	dB	V_{IN} = 0.1V to 4.9V @ 1 kHz
Spurious Free Dynamic Range	SFDR	—	74	—	dB	V_{IN} = 0.1V to 4.9V @ 1 kHz
Analog Input						
Input Voltage Range	—	V_{SS}-0.3	—	V_{DD}+0.3	V	2.7V ≤ V_{DD} ≤ 5.5V
Leakage Current	—	-1	—	+1	µA	
SDA/SCL (open-drain output)						
Data Coding Format	—		Straight Binary		—	
High-Level Input Voltage	V_{IH}	0.7 V_{DD}	—	—	V	
Low-Level Input Voltage	V_{IL}	—	—	0.3 V_{DD}	V	
Low-Level Output Voltage	V_{OL}	—	—	0.4	V	I_{OL} = 3 mA, R_{PU} = 1.53 kΩ
Hysteresis of Schmitt Trigger Inputs	V_{HYST}	—	0.05V_{DD}	—	V	f_{SCL} = 400 kHz only

Note 1: Sample time is the time between conversions after the address byte has been sent to the converter. Refer to Figure 5-6.

2: This parameter is periodically sampled and not 100% tested.

3: R_{PU} = Pull-up resistor on SDA and SCL.

4: SDA and SCL = V_{SS} to V_{DD} at 400 kHz.

5: t_{ACQ} and t_{CONV} are dependent on internal oscillator timing. See Figure 5-5 and Figure 5-6 in relation to SCL.

© 2003-2017 Microchip Technology Inc.

DC ELECTRICAL SPECIFICATIONS (CONTINUED)

Electrical Characteristics: Unless otherwise noted, all parameters apply at V_{DD} = 5.0V, V_{SS} = GND, R_{PU} = 2 kΩ T_A = -40°C to +85°C, I^2C Fast Mode Timing: f_{SCL} = 400 kHz (**Note 3**).						
Parameter	**Sym.**	**Min.**	**Typ.**	**Max.**	**Units**	**Conditions**
Input Leakage Current	I_{LI}	-1	—	+1	µA	V_{IN} = V_{SS} to V_{DD}
Output Leakage Current	I_{LO}	-1	—	+1	µA	V_{OUT} = V_{SS} to V_{DD}
Pin Capacitance (all inputs/outputs)	C_{IN}, C_{OUT}	—	—	10	pF	T_A = 25°C, f = 1 MHz; (**Note 2**)
Bus Capacitance	C_B	—	—	400	pF	SDA drive low, 0.4V
Power Requirements						
Operating Voltage	V_{DD}	2.7	—	5.5	V	
Conversion Current	I_{DD}	—	175	250	µA	
Standby Current	I_{DDS}	—	0.005	1	µA	SDA, SCL = V_{DD}
Active Bus Current	I_{DDA}	—	—	120	µA	**Note 4**
Conversion Rate						
Conversion Time	t_{CONV}	—	8.96	—	µs	**Note 5**
Analog Input Acquisition Time	t_{ACQ}	—	1.12	—	µs	**Note 5**
Sample Rate	f_{SAMP}	—	—	22.3	ksps	f_{SCL} = 400 kHz (**Note 1**)

Note 1: Sample time is the time between conversions after the address byte has been sent to the converter. Refer to Figure 5-6.

2: This parameter is periodically sampled and not 100% tested.

3: R_{PU} = Pull-up resistor on SDA and SCL.

4: SDA and SCL = V_{SS} to V_{DD} at 400 kHz.

5: t_{ACQ} and t_{CONV} are dependent on internal oscillator timing. See Figure 5-5 and Figure 5-6 in relation to SCL.

TEMPERATURE SPECIFICATIONS

Electrical Characteristics: Unless otherwise noted, all parameters apply at V_{DD} = 5.0V, V_{SS} = GND.						
Parameter	**Sym.**	**Min.**	**Typ.**	**Max.**	**Units**	**Conditions**
Temperature Ranges						
Operating Temperature Range	T_A	-40	—	+125	°C	
Extended Temperature Range	T_A	-40	—	+125	°C	
Storage Temperature Range	T_A	-65	—	+150	°C	
Thermal Package Resistances						
Thermal Resistance, SOT-23	θ_{JA}	—	256	—	°C/W	

© 2003-2017 Microchip Technology Inc.

TIMING SPECIFICATIONS

Electrical Characteristics: All parameters apply at V_{DD} = 2.7V - 5.5V, V_{SS} = GND, T_A = -40°C to +85°C.						
Parameter	**Sym.**	**Min.**	**Typ.**	**Max.**	**Units**	**Conditions**
I²C Standard Mode						
Clock Frequency	f_{SCL}	0	—	100	kHz	
Clock High Time	T_{HIGH}	4000	—	—	ns	
Clock Low Time	T_{LOW}	4700	—	—	ns	
SDA and SCL Rise Time	T_R	—	—	1000	ns	From V_{IL} to V_{IH} (**Note 1**)
SDA and SCL Fall Time	T_F	—	—	300	ns	From V_{IL} to V_{IH} (**Note 1**)
Start Condition Hold Time	$T_{HD:STA}$	4000	—	—	ns	
Start Condition Setup Time	$T_{SU:STA}$	4700	—	—	ns	
Data Input Setup Time	$T_{SU:DAT}$	250	—	—	ns	
Stop Condition Setup Time	$T_{SU:STO}$	4000	—	—	ns	
Stop Condition Hold Time	$T_{HD:STD}$	4000	—	—	ns	
Output Valid from Clock	T_{AA}	—	—	3500	ns	
Bus Free Time	T_{BUF}	4700	—	—	ns	**Note 2**
Input Filter Spike Suppression	T_{SP}	—	—	50	ns	SDA and SCL pins (**Note 1**)
I²C Fast Mode						
Clock Frequency	F_{SCL}	0	—	400	kHz	
Clock High Time	T_{HIGH}	600	—	—	ns	
Clock Low Time	T_{LOW}	1300	—	—	ns	
SDA and SCL Rise Time	T_R	20 + 0.1C_B	—	300	ns	From V_{IL} to V_{IH} (**Note 1**)
SDA and SCL Fall Time	T_F	20 + 0.1C_B	—	300	ns	From V_{IL} to V_{IH} (**Note 1**)
Start Condition Hold Time	$T_{HD:STA}$	600	—	—	ns	
Start Condition Setup time	$T_{SU:STA}$	600	—	—	ns	
Data Input Hold Time	$T_{HD:DAT}$	0	—	0.9	ms	
Data Input Setup Time	$T_{SU:DAT}$	100	—	—	ns	
Stop Condition Setup Time	$T_{SU:STO}$	600	—	—	ns	
Stop Condition Hold Time	$T_{HD:STD}$	600	—	—	ns	
Output Valid from Clock	T_{AA}	—	—	900	ns	
Bus Free Time	T_{BUF}	1300	—	—	ns	**Note 2**
Input Filter Spike Suppression	T_{SP}	—	—	50	ns	SDA and SCL pins (**Note 1**)

Note 1: This parameter is periodically sampled and not 100% tested.

2: Time the bus must be free before a new transmission can start.

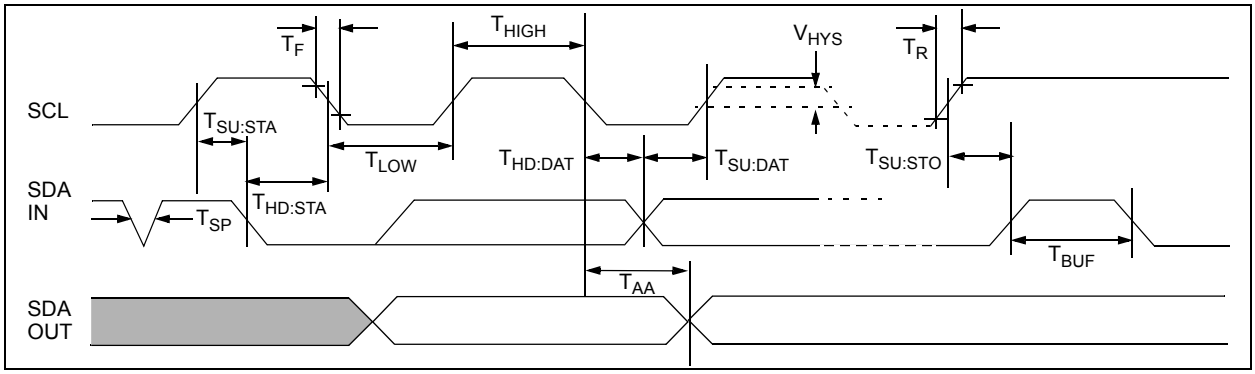

FIGURE 1-1: *Standard and Fast Mode Bus Timing Data.*

2.0 TYPICAL PERFORMANCE CURVES

Note: The graphs and tables provided following this note are a statistical summary based on a limited number of samples and are provided for informational purposes only. The performance characteristics listed herein are not tested or guaranteed. In some graphs or tables, the data presented may be outside the specified operating range (e.g., outside specified power supply range) and therefore outside the warranted range.

Note: Unless otherwise indicated, V_{DD} = 5V, V_{SS} = 0V, I^2C Fast Mode Timing (SCL = 400 kHz), Continuous Conversion Mode (f_{SAMP} = 22.3 ksps), T_A = +25°C.

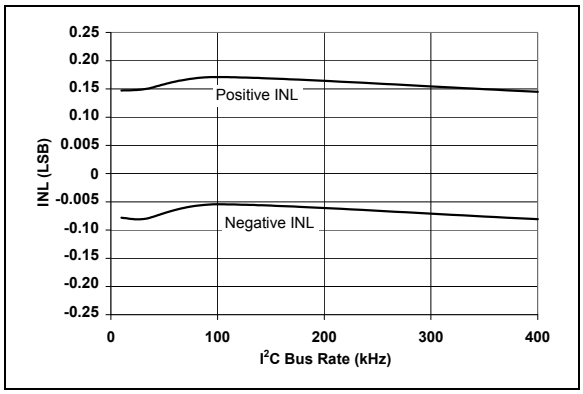

FIGURE 2-1: *INL vs. Clock Rate.*

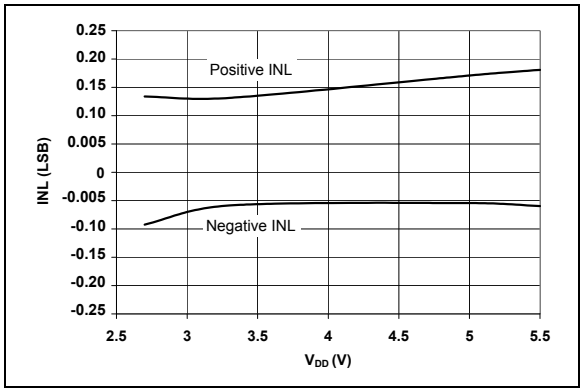

FIGURE 2-2: *INL vs. V_{DD} - I^2C Standard Mode (f_{SCL} = 100 kHz).*

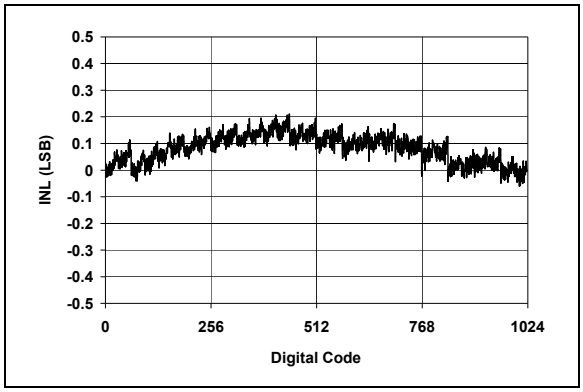

FIGURE 2-3: *INL vs. Code (Representative Part).*

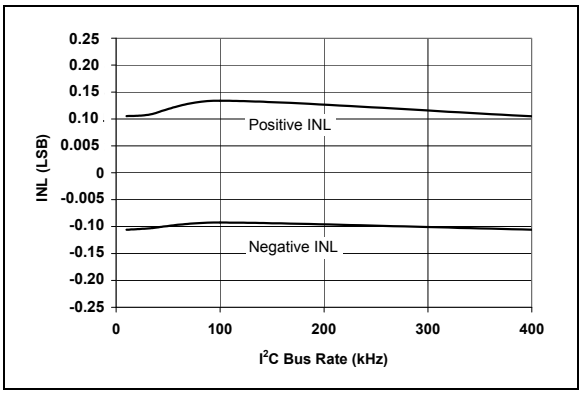

FIGURE 2-4: *INL vs. Clock Rate (V_{DD} = 2.7V).*

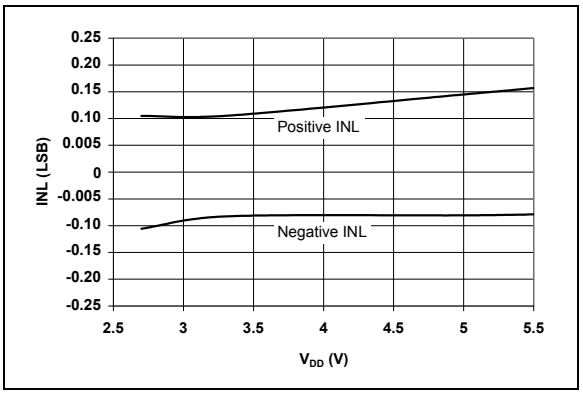

FIGURE 2-5: *INL vs. V_{DD} - I^2C Fast Mode (f_{SCL} = 400 kHz).*

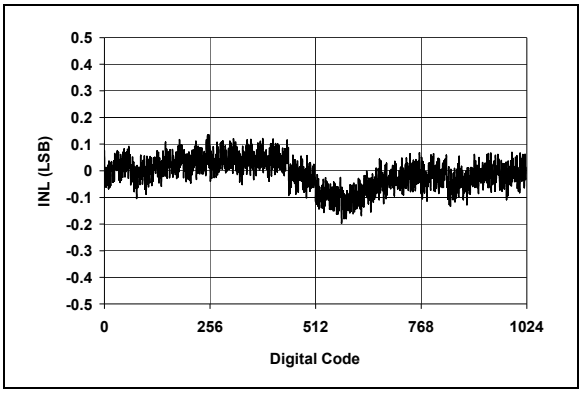

FIGURE 2-6: *INL vs. Code (Representative Part, V_{DD} = 2.7V).*

© 2003-2017 Microchip Technology Inc.

Note: Unless otherwise indicated, V_{DD} = 5V, V_{SS} = 0V, I^2C Fast Mode Timing (SCL = 400 kHz), Continuous Conversion Mode (f_{SAMP} = 22.3 ksps), T_A = +25°C.

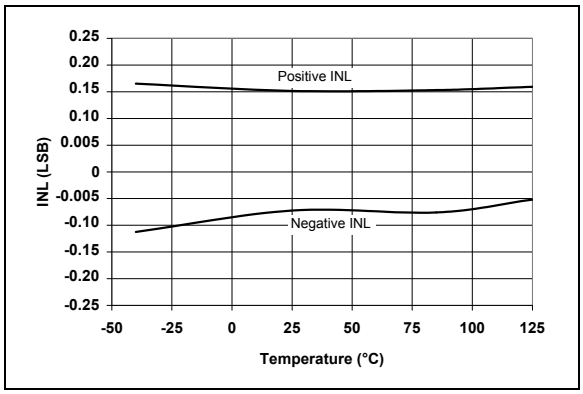

FIGURE 2-7: *INL vs. Temperature.*

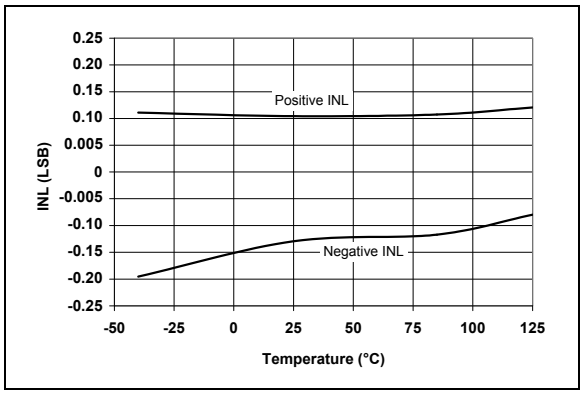

FIGURE 2-10: *INL vs. Temperature (V_{DD} = 2.7V).*

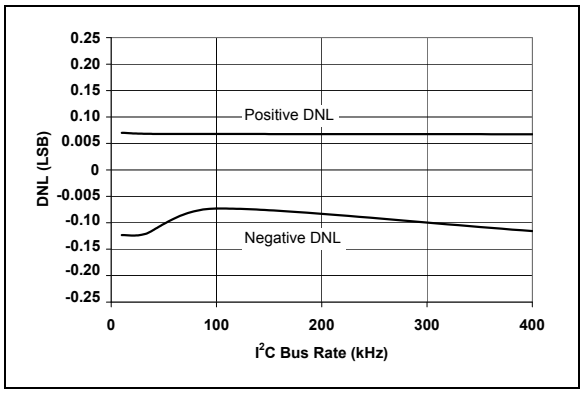

FIGURE 2-8: *DNL vs. Clock Rate.*

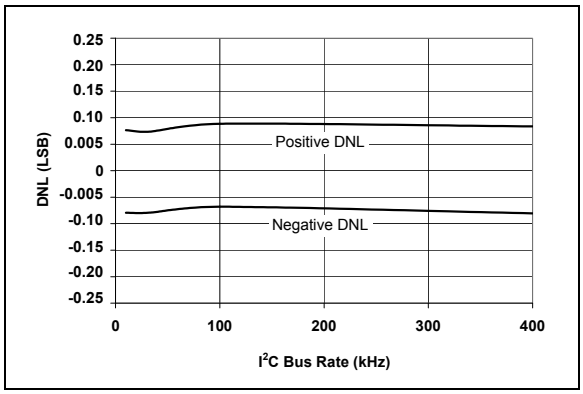

FIGURE 2-11: *DNL vs. Clock Rate (V_{DD} = 2.7V).*

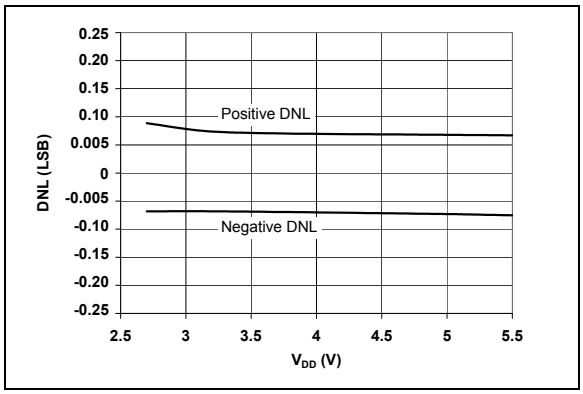

FIGURE 2-9: *DNL vs. V_{DD} - I^2C Standard Mode (f_{SCL} = 100 kHz).*

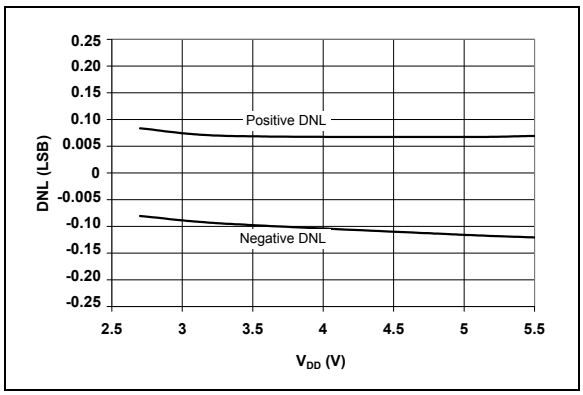

FIGURE 2-12: *DNL vs. V_{DD} - I^2C Fast Mode (f_{SCL} = 400 kHz).*

Note: Unless otherwise indicated, V_{DD} = 5V, V_{SS} = 0V, I^2C Fast Mode Timing (SCL = 400 kHz), Continuous Conversion Mode (f_{SAMP} = 22.3 ksps), T_A = +25°C.

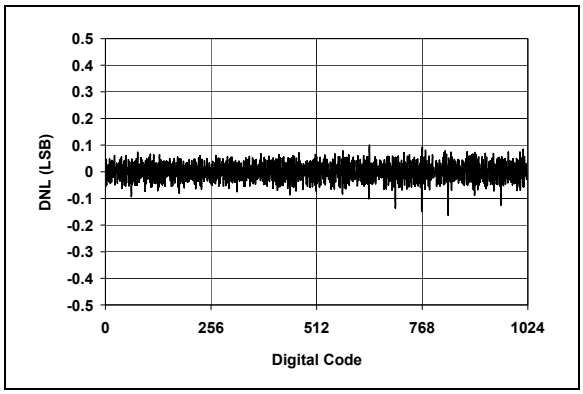

FIGURE 2-13: *DNL vs. Code (Representative Part).*

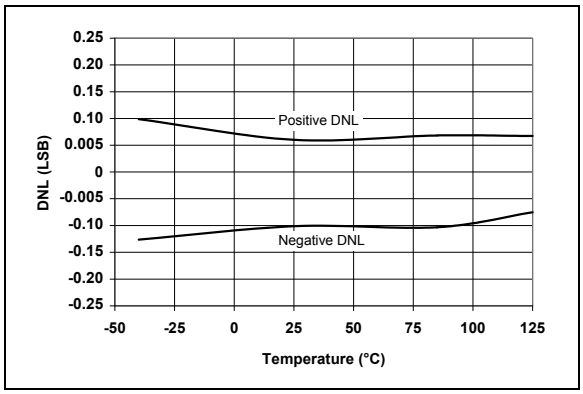

FIGURE 2-14: *DNL vs. Temperature.*

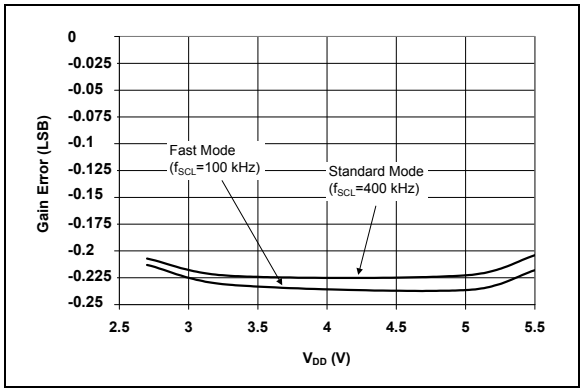

FIGURE 2-15: *Gain Error vs. V_{DD}.*

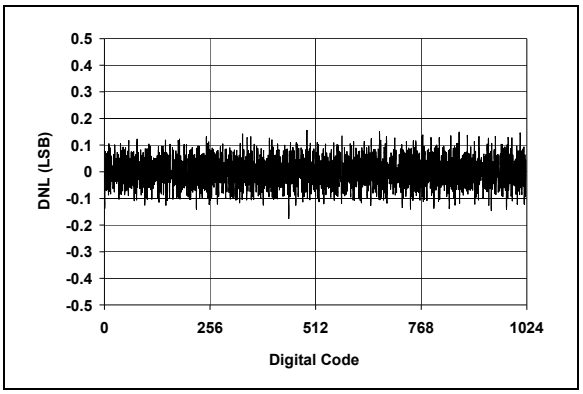

FIGURE 2-16: *DNL vs. Code (Representative Part, V_{DD} = 2.7V).*

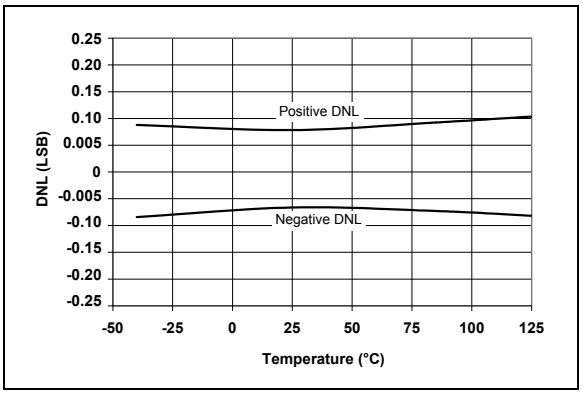

FIGURE 2-17: *DNL vs. Temperature (V_{DD} = 2.7V).*

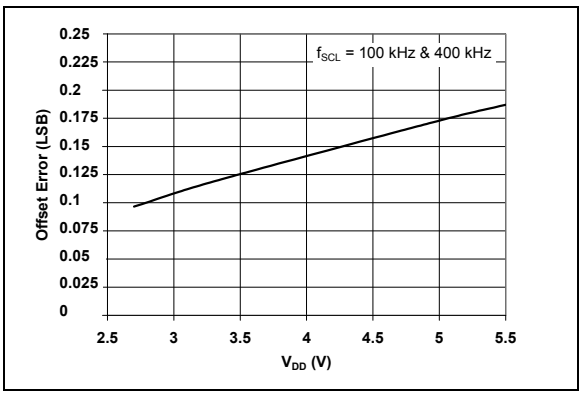

FIGURE 2-18: *Offset Error vs. V_{DD}.*

© 2003-2017 Microchip Technology Inc.

Note: Unless otherwise indicated, V_{DD} = 5V, V_{SS} = 0V, I^2C Fast Mode Timing (SCL = 400 kHz), Continuous Conversion Mode (f_{SAMP} = 22.3 ksps), T_A = +25°C.

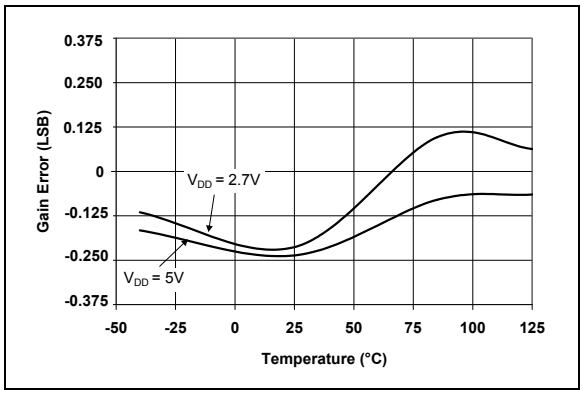

FIGURE 2-19: *Gain Error vs. Temperature.*

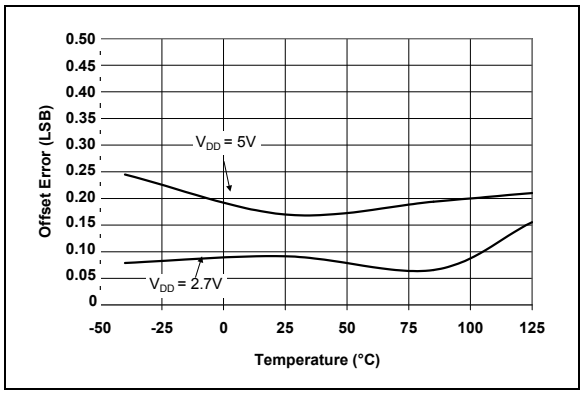

FIGURE 2-22: *Offset Error vs. Temperature.*

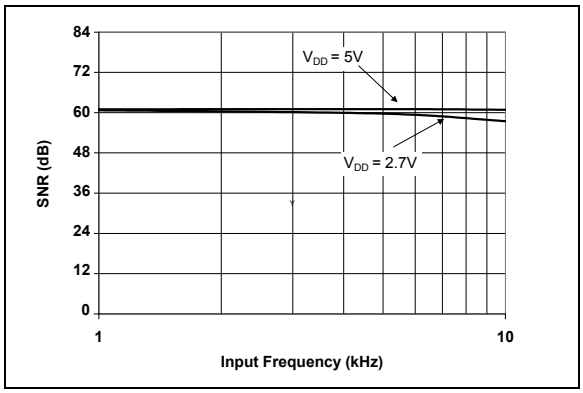

FIGURE 2-20: *SNR vs. Input Frequency.*

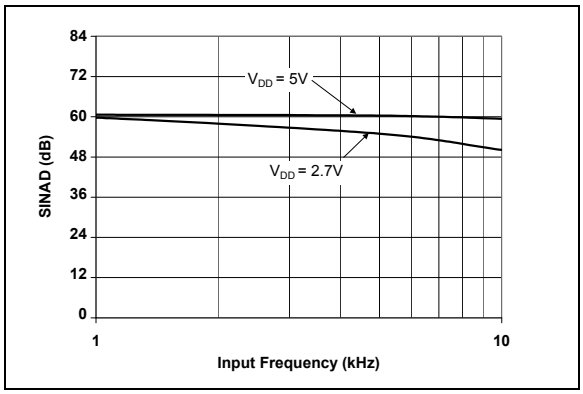

FIGURE 2-23: *SINAD vs. Input Frequency.*

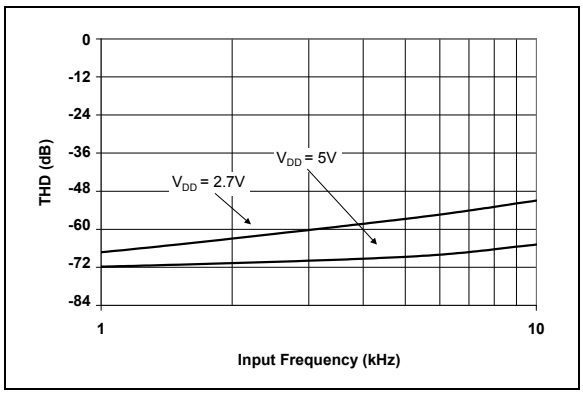

FIGURE 2-21: *THD vs. Input Frequency.*

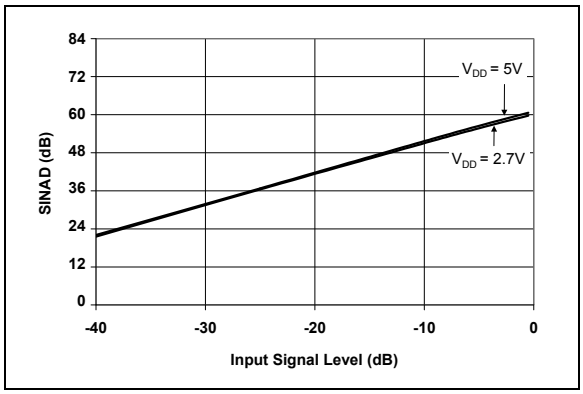

FIGURE 2-24: *SINAD vs. Input Signal Level.*

Note: Unless otherwise indicated, V_{DD} = 5V, V_{SS} = 0V, I^2C Fast Mode Timing (SCL = 400 kHz), Continuous Conversion Mode (f_{SAMP} = 22.3 ksps), T_A = +25°C.

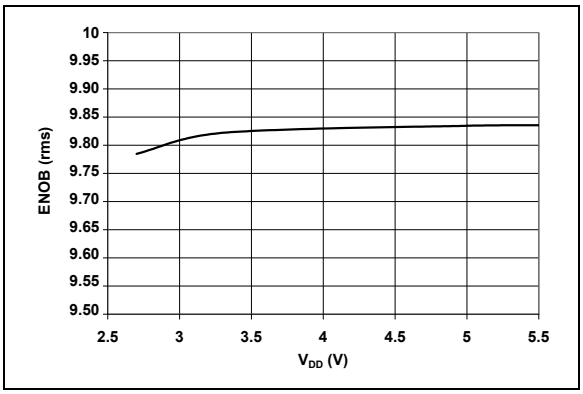

FIGURE 2-25: *ENOB vs. V_{DD}.*

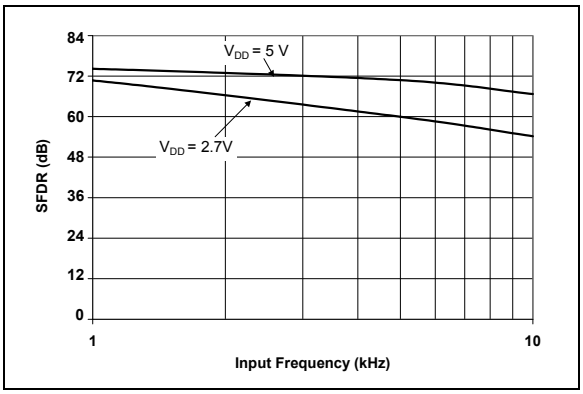

FIGURE 2-26: *SFDR vs. Input Frequency.*

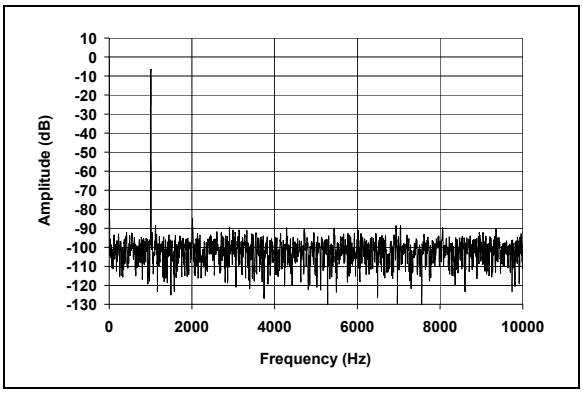

FIGURE 2-27: *Spectrum Using I^2C Fast Mode (Representative Part, 1 kHz Input Frequency).*

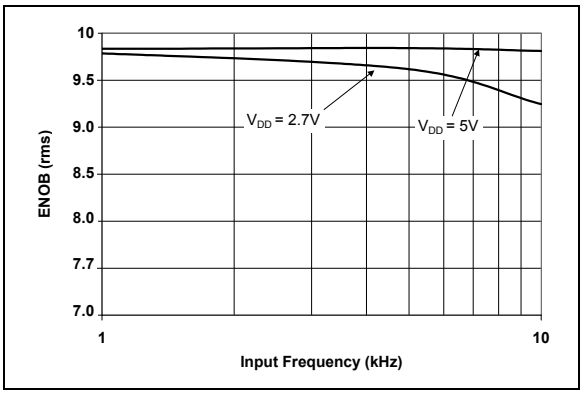

FIGURE 2-28: *ENOB vs. Input Frequency.*

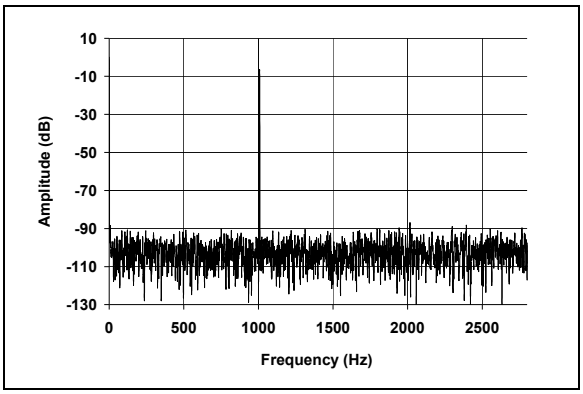

FIGURE 2-29: *Spectrum Using I^2C Standard Mode (Representative Part, 1 kHz Input Frequency).*

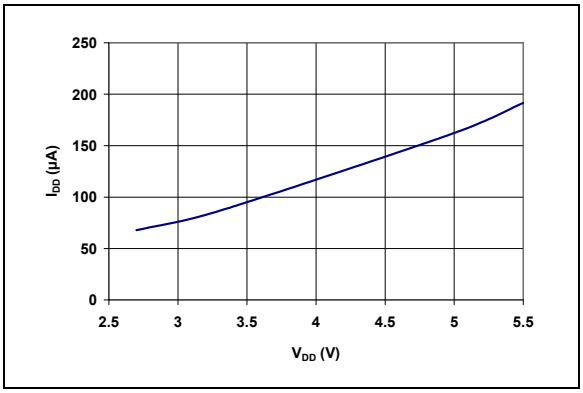

FIGURE 2-30: *I_{DD} (Conversion) vs. V_{DD}.*

© 2003-2017 Microchip Technology Inc.

Note: Unless otherwise indicated, V_{DD} = 5V, V_{SS} = 0V, I^2C Fast Mode Timing (SCL = 400 kHz), Continuous Conversion Mode (f_{SAMP} = 22.3 ksps), T_A = +25°C.

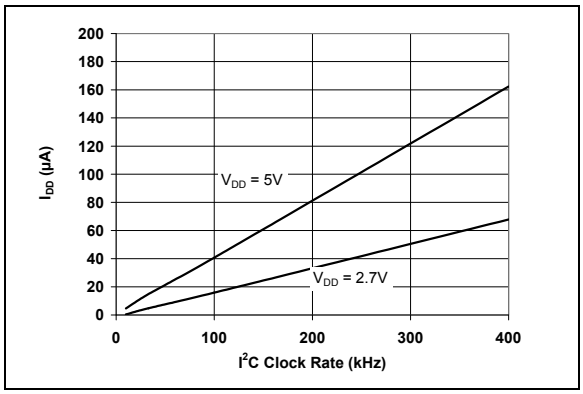

FIGURE 2-31: *I_{DD} (Conversion) vs. Clock Rate.*

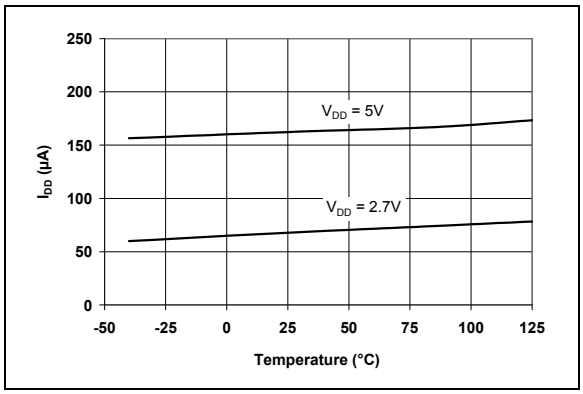

FIGURE 2-32: *I_{DD} (Conversion) vs. Temperature.*

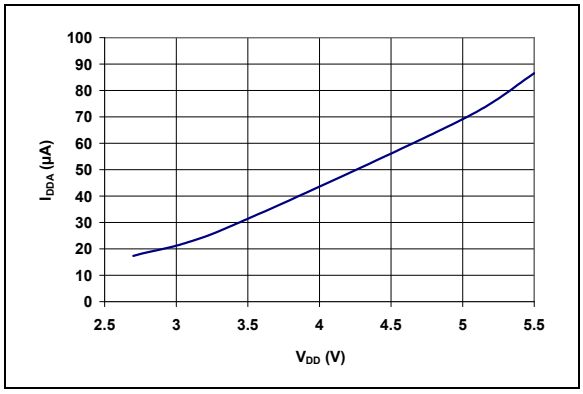

FIGURE 2-33: *I_{DDA} (Active Bus) vs. V_{DD}.*

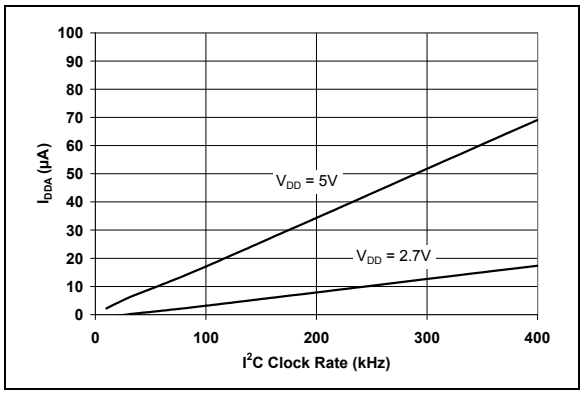

FIGURE 2-34: *I_{DDA} (Active Bus) vs. Clock Rate.*

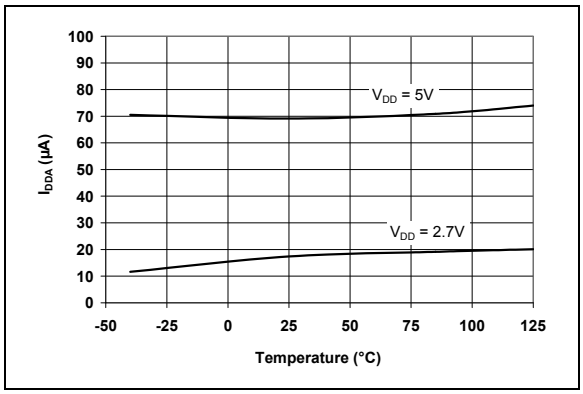

FIGURE 2-35: *I_{DDA} (Active Bus) vs. Temperature.*

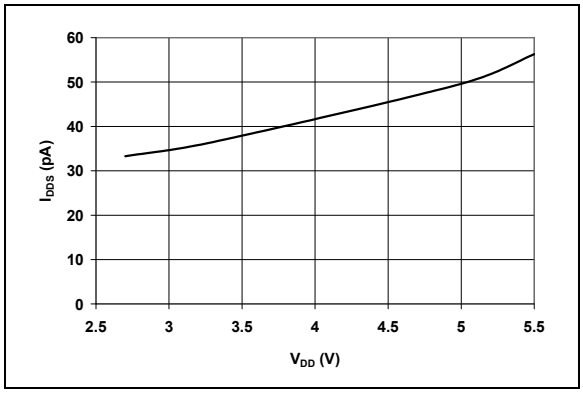

FIGURE 2-36: *I_{DDS} (Standby) vs. V_{DD}.*

Note: Unless otherwise indicated, V_{DD} = 5V, V_{SS} = 0V, I^2C Fast Mode Timing (SCL = 400 kHz), Continuous Conversion Mode (f_{SAMP} = 22.3 ksps), T_A = +25°C.

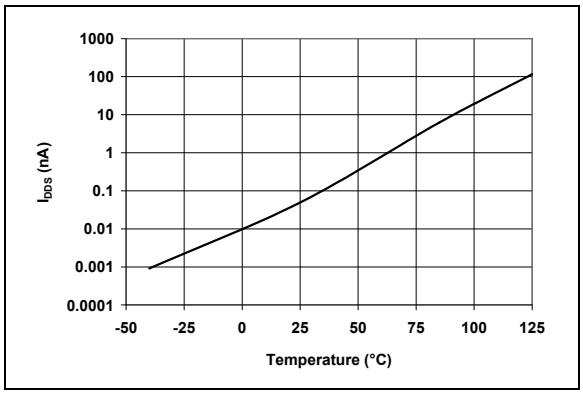

FIGURE 2-37: *I_{DDS} (Standby) vs. Temperature.*

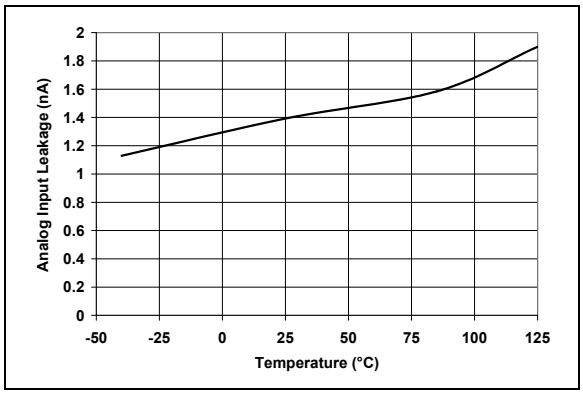

FIGURE 2-38: *Analog Input Leakage vs. Temperature.*

2.1 Test Circuit

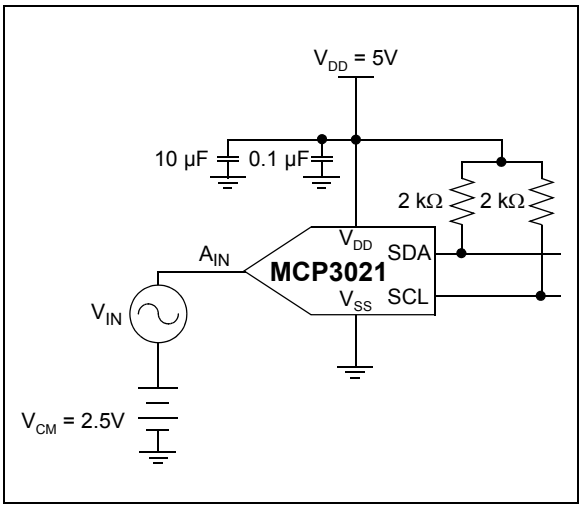

FIGURE 2-39: *Typical Test Configuration.*

© 2003-2017 Microchip Technology Inc.

3.0 PIN FUNCTIONS

Table 3-1 lists the function of the pins.

TABLE 3-1: PIN FUNCTION TABLE

Name	Function
V_{DD}	+2.7V to 5.5V Power Supply
V_{SS}	Ground
A_{IN}	Analog Input
SDA	Serial Data In/Out
SCL	Serial Clock In

3.1 V_{DD} and V_{SS}

The V_{DD} pin, with respect to V_{SS}, provides power to the device as well as a voltage reference for the conversion process. Refer to **Section 6.4 "Device Power and Layout Considerations"** for tips on power and grounding.

3.2 Analog Input (A_{IN})

A_{IN} is the input pin to the sample and hold circuitry of the Successive Approximation Register (SAR) converter. Care should be taken in driving this pin. Refer to **Section 6.1 "Driving the Analog Input"** for more information. For proper conversions, the voltage on this pin can vary from V_{SS} to V_{DD}.

3.3 Serial Data (SDA)

SD is a bidirectional pin used to transfer addresses and data into and out of the device. It is an open-drain terminal, therefore, the SDA bus requires a pull-up resistor to V_{DD} (typically 10 kΩ for 100 kHz and 2 kΩ for 400 kHz SCL clock speeds. Refer to **Section 6.2 "Connecting to the I²C Bus"** for more information.

For normal data transfer, SDA is allowed to change only during SCL low. Changes during SCL high are reserved for indicating the Start and Stop conditions. Refer to **Section 5.1 "I²C Bus Characteristics"** for more information.

3.4 Serial Clock (SCL)

SCL is an input pin used to synchronize the data transfer to and from the device on the SDA pin and is an open-drain terminal. Therefore, the SCL bus requires a pull-up resistor to V_{DD} (typically, 10 kΩ for 100 kHz and 2 kΩ for 400 kHz SCL clock speeds. Refer to **Section 6.2 "Connecting to the I²C Bus"** for more information.

For normal data transfer, SDA is allowed to change only during SCL low. Changes during SCL high are reserved for indicating the Start and Stop conditions. Refer to **Section 6.1 "Driving the Analog Input"** for more information.

4.0 DEVICE OVERVIEW

The MCP3021 employs a classic SAR architecture. This architecture uses an internal sample and hold capacitor to store the analog input while the conversion is taking place. At the end of the acquisition time, the input switch of the converter opens and the device uses the collected charge on the internal sample and hold capacitor to produce a serial 10-bit digital output code. The acquisition time and conversion is self-timed using an internal clock. After each conversion, the results are stored in a 10-bit register that can be read at any time.

Communication with the device is accomplished with a 2-wire I^2C interface. Maximum sample rates of 22.3 ksps are possible with the MCP3021 in a continuous conversion mode and an SCL clock rate of 400 kHz.

4.1 Digital Output Code

The digital output code produced by the MCP3021 is a function of the input signal and power supply voltage (V_{DD}). As the V_{DD} level is reduced, the LSB size is reduced accordingly. The theoretical LSB size is shown below.

EQUATION

$$\text{LSB SIZE} = \frac{V_{DD}}{1024}$$

V_{DD} = Supply voltage

The output code of the MCP3021 is transmitted serially with MSB first, the format of the code is straight binary.

4.2 Conversion Time (t_{CONV})

The conversion time is the time required to obtain the digital result once the analog input is disconnected from the holding capacitor. With the MCP3021, the specified conversion time is typically 8.96 µs. This time is dependent on the internal oscillator and independent of SCL.

4.3 Acquisition Time (t_{ACQ})

The acquisition time is the amount of time the sample cap array is acquiring charge.

The acquisition time is, typically, 1.12 µs. This time is dependent on the internal oscillator and independent of SCL.

4.4 Sample Rate

Sample rate is the inverse of the maximum amount of time that is required from the point of acquisition of the first conversion to the point of acquisition of the second conversion.

The sample rate can be measured either by single or continuous conversions. A single conversion includes a Start bit, Address byte, two data bytes, and a Stop bit. This sample rate is measured from one Start bit to the next Start bit.

For continuous conversions (requested by the Master by issuing an Acknowledge after a conversion), the maximum sample rate is measured from conversion to conversion, or a total of 18 clocks (two data bytes and two Acknowledge bits). Refer to **Section 5.2 "Device Addressing"** for more information.

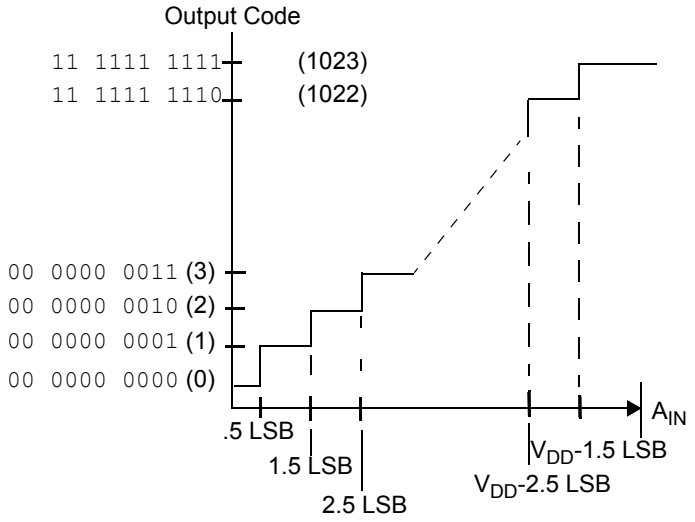

FIGURE 4-1: *Transfer Function.*

© 2003-2017 Microchip Technology Inc.

4.5 Differential Nonlinearity (DNL)

In the ideal ADC transfer function, each code has a uniform width. That is, the difference in analog input voltage is constant from one code transition point to the next. Differential nonlinearity (DNL) specifies the deviation of any code in the transfer function from an ideal code width of 1 LSB. The DNL is determined by subtracting the locations of successive code transition points after compensating for any gain and offset errors. A positive DNL implies that a code is longer than the ideal code width, whereas a negative DNL implies that a code is shorter than the ideal width.

4.6 Integral Nonlinearity (INL)

Integral nonlinearity (INL) is a result of cumulative DNL errors and specifies how much the overall transfer function deviates from a linear response. The method of measurement used in the MCP3021 ADC to determine INL is the end-point method.

4.7 Offset Error

Offset error is defined as a deviation of the code transition points that are present across all output codes. This has the effect of shifting the entire A/D transfer function. The offset error is measured by finding the difference between the actual location of the first code transition and the desired location of the first transition. The ideal location of the first code transition is located at 1/2 LSB above V_{SS}.

4.8 Gain Error

Gain error determines the amount of deviation from the ideal slope of the ADC transfer function. Before the gain error is determined, the offset error is measured and subtracted from the conversion result. The gain error can then be determined by finding the location of the last code transition and comparing that location to the ideal location. The ideal location of the last code transition is 1.5 LSBs below full-scale or V_{DD}.

4.9 Conversion Current (I_{DD})

Conversion current is the average amount of current over the time required to perform a 10-bit conversion.

4.10 Active Bus Current (I_{DDA})

The average amount of current over the time required to monitor the I^2C bus. Any current that the device consumes while it is not being addressed is referred to as Active Bus current.

4.11 Standby Current (I_{DDS})

The average amount of current required while no conversion is occurring and no data is being output (i.e., SCL and SDA lines are quiet).

4.12 I^2C Standard Mode Timing

I^2C specification where the frequency of SCL is 100 kHz.

4.13 I^2C Fast Mode Timing

I^2C specification where the frequency of SCL is 400 kHz.

5.0 SERIAL COMMUNICATIONS

5.1 I²C Bus Characteristics

The following bus protocol are defined:

- Data transfer may be initiated only when the bus is not busy.
- During data transfer, the data line must remain stable whenever the clock line is high. Changes in the data line while the clock line is high will be interpreted as a Start or Stop condition.

Accordingly, the following bus conditions are defined (refer to Figure 5-1).

5.1.1 BUS NOT BUSY (A)

Both data and clock lines remain high.

5.1.2 START DATA TRANSFER (B)

A high-to-low transition of the SDA line while the clock (SCL) is high determines a Start condition. All commands must be preceded by a Start condition.

5.1.3 STOP DATA TRANSFER (C)

A low-to-high transition of the SDA line while the clock (SCL) is high determines a Stop condition. All operations must be ended with a Stop condition.

5.1.4 DATA VALID (D)

The state of the data line represents valid data when after a Start condition, the data line is stable for the duration of the high period of the clock signal.

The data on the line must be changed during the low period of the clock signal. There is one clock pulse per bit of data.

Each data transfer is initiated with a Start condition and terminated with a Stop condition. The number of data bytes being transferred between the Start and Stop conditions is determined by the master device and is unlimited.

5.1.5 ACKNOWLEDGE

Each receiving device, when addressed, is obliged to generate an Acknowledge bit after the reception of each byte. The master device must generate an extra clock pulse that is associated with this Acknowledge bit.

The device that acknowledges has to pull down the SDA line during the acknowledge clock pulse in such a way that the SDA line is stable low during the high period of the acknowledge-related clock pulse. Setup and hold times must be taken into account. During reads, a master device must signal an end of data to the slave by not generating an Acknowledge bit on the last byte that is clocked out of the slave (NAK). In this case, the slave (MCP3021) releases the bus to allow the master device to generate the Stop condition.

The MCP3021 supports a bidirectional 2-wire bus and data transmission protocol. The device that sends data onto the bus is the transmitter and the device receiving data is the receiver. The bus has to be controlled by a master device that generates the serial clock (SCL), controls the bus access and generates the Start and Stop conditions, whereas the MCP3021 works as a slave device. Both master and slave devices can operate as either transmitter or receiver, but the master device determines which mode is activated.

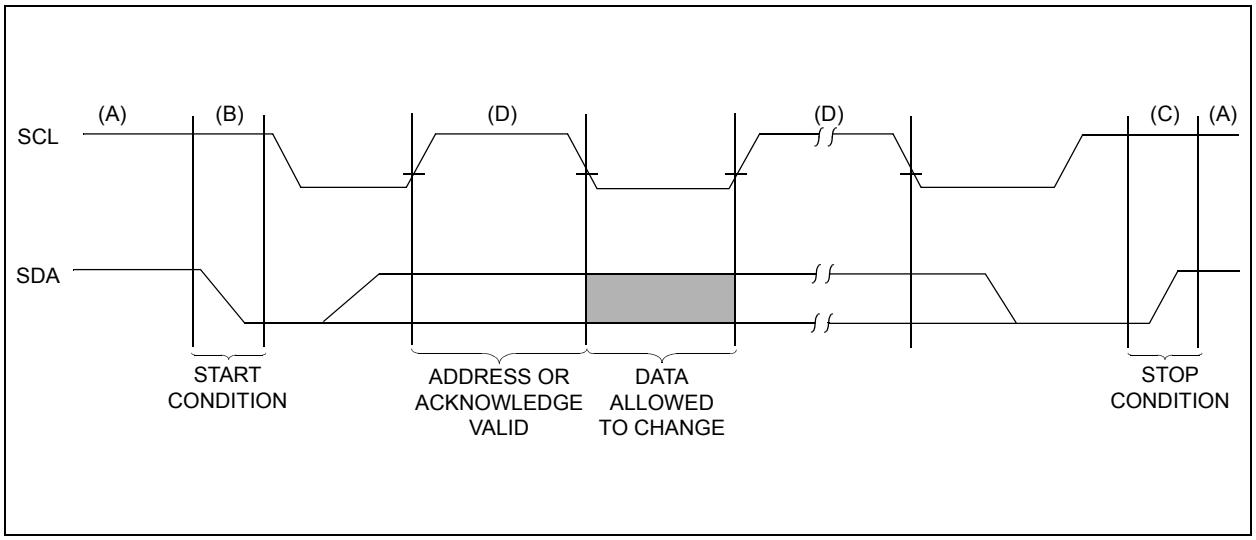

FIGURE 5-1: *Data Transfer Sequence on the Serial Bus.*

© 2003-2017 Microchip Technology Inc.

5.2 Device Addressing

The address byte is the first byte received following the Start condition from the master device. The first part of the control byte consists of a 4-bit device code, which is set to 1001 for the MCP3021. The device code is followed by three address bits: A2, A1, and A0. The default address bits are 101. Contact the Microchip factory for additional address bit options.The address bits allow up to eight MCP3021 devices on the same bus and are used to determine which device is accessed.

The eighth bit of the slave address determines if the master device wants to read conversion data or write to the MCP3021. When set to a 1, a read operation is selected. When set to a 0, a write operation is selected. There are no writable registers on the MCP3021, therefore, this bit must be set to a 1 to initiate a conversion.

The MCP3021 is a slave device that is compatible with the 2-wire I^2C serial interface protocol. A hardware connection diagram is shown in Figure 6-2. Communication is initiated by the microcontroller (master device), which sends a Start bit followed by the address byte.

On completion of the conversion(s) performed by the MCP3021, the microcontroller must send a Stop bit to end the communication.

The last bit in the device address byte is the R/$\overline{W}$ bit. When this bit is a logic 1, a conversion is executed. Setting this bit to logic 0 also results in an Acknowledge (ACK) from the MCP3021, with the device then releasing the bus. This can be used for device polling. Refer to **Section 6.3 "Device Polling"** for more information.

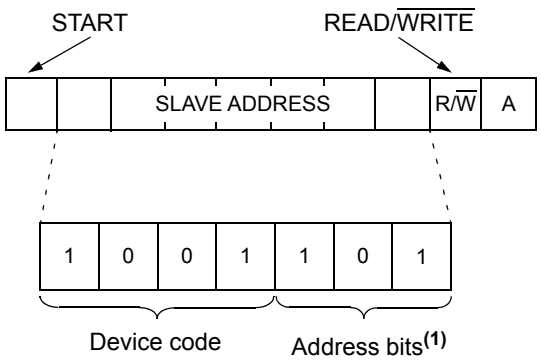

Note 1: Contact Microchip for additional address bits.

FIGURE 5-2: *Device Addressing.*

5.3 Executing a Conversion

This section describes the details of communicating with the MCP3021 device. Initiating the sample and hold acquisition, reading the conversion data, and executing multiple conversions are discussed.

5.3.1 INITIATING THE SAMPLE AND HOLD

The acquisition and conversion of the input signal begins with the falling edge of the R/$\overline{W}$ bit of the address byte. At this point, the internal clock initiates the sample, hold and conversion cycle, all of which are internal to the ADC.

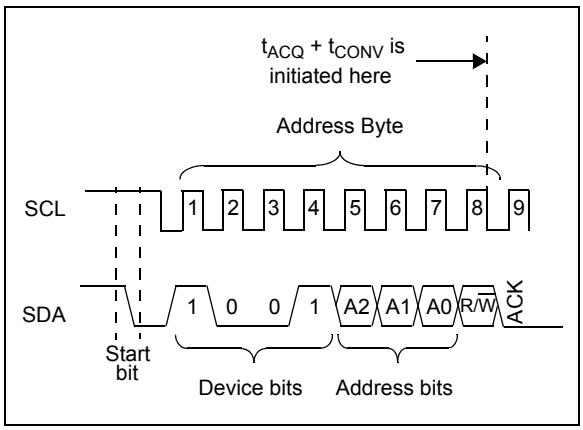

FIGURE 5-3: *Initiating the Conversion, Address Byte.*

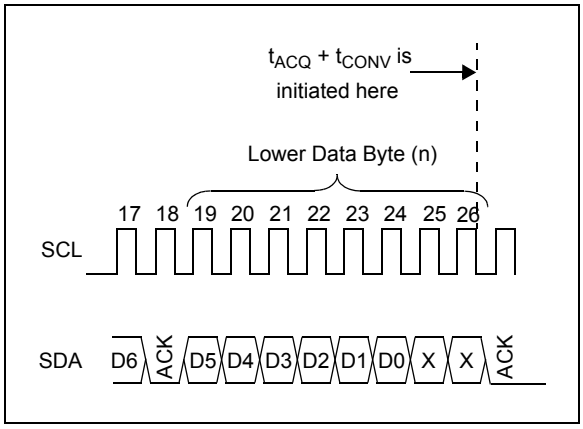

FIGURE 5-4: *Initiating the Conversion, Continuous Conversions.*

The input signal is initially sampled with the first falling edge of the clock following the transmission of a logic-high R/$\overline{W}$ bit. Additionally, with the rising edge of the SCL, the ADC transmits an Acknowledge bit (ACK = 0). The master must release the data bus during this clock pulse to allow the MCP3021 to pull the line low (refer to Figure 5-3).

For consecutive samples, sampling begins on the last bit of the lower data byte. Refer to Figure 5-6 for the timing diagram.

5.3.2 READING THE CONVERSION DATA

After the MCP3021 acknowledges the address byte, the device transmits four 0 bits followed by the upper four data bits of the conversion. The master device acknowledges this byte with an ACK = low. With the following six clock pulses, the MCP3021 transmits the lower six data bits from the conversion. The last two bits are “don’t cares”, and do not contain valid data. The master sends an ACK = high, indicating to the MCP3021 that no more data is requested. The master can send a Stop bit to end the transmission.

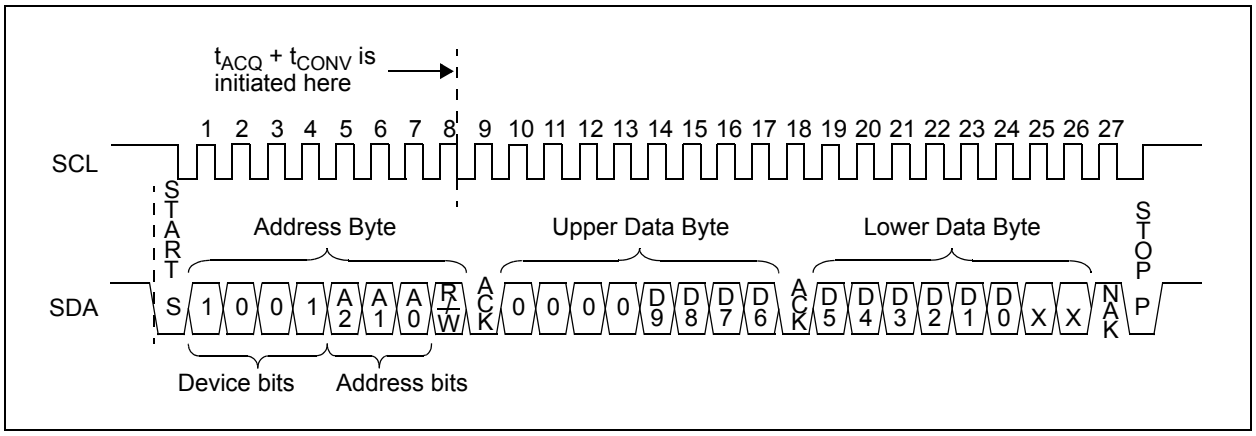

FIGURE 5-5: *Executing a Conversion.*

5.3.3 CONSECUTIVE CONVERSIONS

For consecutive samples, sampling begins on the falling edge of the last bit of the lower data byte. See Figure 5-6 for timing.

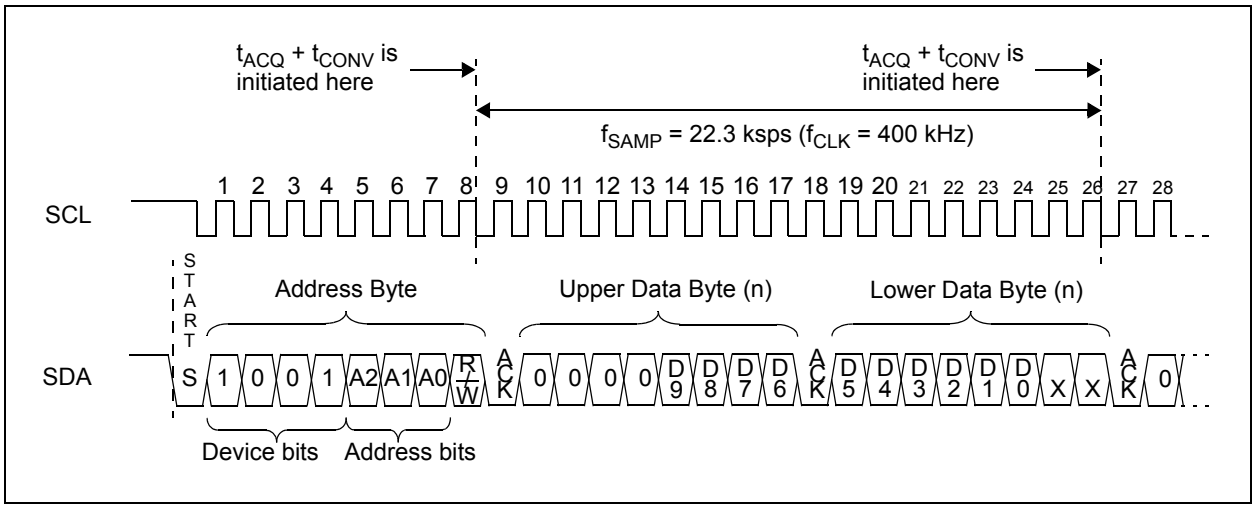

FIGURE 5-6: *Continuous Conversion.*

© 2003-2017 Microchip Technology Inc.

6.0 APPLICATION INFORMATION

6.1 Driving the Analog Input

The MCP3021 has a single-ended analog input (A_{IN}). For proper conversion results, the voltage at the A_{IN} pin must be kept between V_{SS} and V_{DD}. If the converter has no offset error, gain error, INL or DNL errors and the voltage level of A_{IN} is equal to or less than V_{SS} + 1/2 LSB, the resultant code is `000h`. Additionally, if the voltage at A_{IN} is equal to or greater than V_{DD} - 1.5 LSB, the output code is `1FFh`.

The analog input model is shown in Figure 6-1. In this diagram, the source impedance (R_{SS}) adds to the internal sampling switch (R_S) impedance, directly affecting the time required to charge the capacitor (C_{SAMPLE}). Consequently, a larger source impedance increases the offset error, gain error and integral linearity errors of the conversion. Ideally, the impedance of the signal source should be near zero. This is achievable with an operational amplifier such as the MCP6022, which has a closed-loop output impedance of tens of ohms.

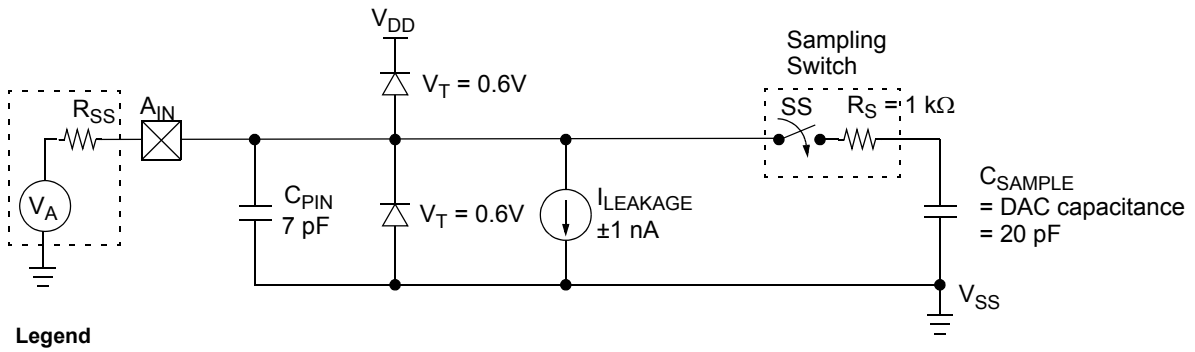

Legend

V_A	=	signal source
R_{SS}	=	source impedance
A_{IN}	=	analog input pad
C_{PIN}	=	analog input pin capacitance
V_T	=	threshold voltage
$I_{LEAKAGE}$	=	leakage current at the pin due to various junctions
SS	=	sampling switch
R_S	=	sampling switch resistor
C_{SAMPLE}	=	sample/hold capacitance

FIGURE 6-1: *Analog Input Model, A_{IN}.*

6.2 Connecting to the I²C Bus

The I²C bus is an open collector bus, requiring pull-up resistors connected to the SDA and SCL lines. This configuration is shown in Figure 6-2.

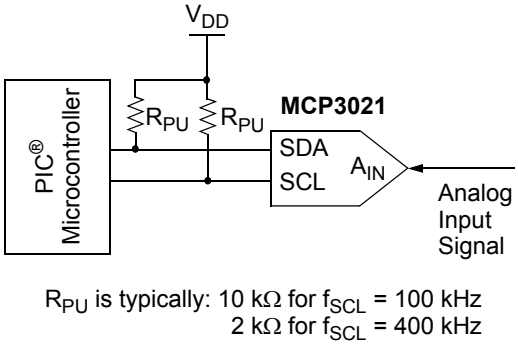

FIGURE 6-2: *Pull-up Resistors on I²C Bus.*

The number of devices connected to the bus is only limited by the maximum bus capacitance of 400 pF. A possible configuration using multiple devices is shown in Figure 6-3.

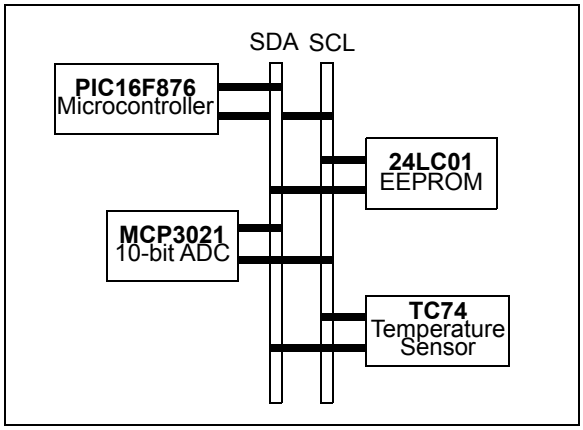

FIGURE 6-3: *Multiple Devices on I²C Bus.*

6.3 Device Polling

In some instances, it may be necessary to test for MCP3021 presence on the I²C bus without performing a conversion as described in Figure 6-4 where the R/$\overline{W}$ bit in the address byte is set to a zero. The MCP3021 acknowledges by pulling SDA low during the ACK clock and then releases the bus back to the I²C master. A Stop or repeated Start bit can be issued from the master and I²C communication can continue.

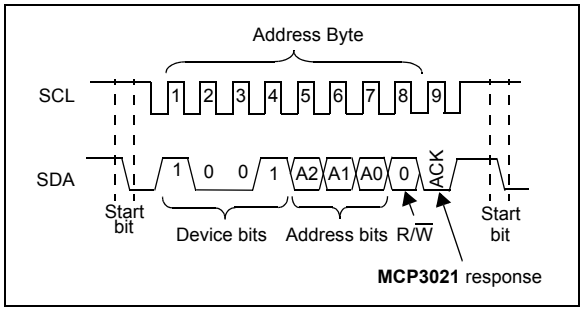

FIGURE 6-4: *Device Polling.*

6.4 Device Power and Layout Considerations

6.4.1 POWERING THE MCP3021

V_{DD} supplies the power to the device and the reference voltage. A bypass capacitor value of 0.1 µF is recommended. Adding a 10 µF capacitor in parallel is recommended to attenuate higher frequency noise that is present in some systems.

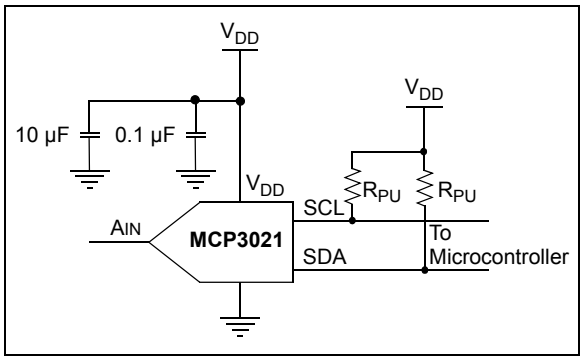

FIGURE 6-5: *Powering the MCP3021.*

Note:	When power-down of the MCP3021 is needed during applications (after power-up), it is highly recommended to bring down the V_{DD} to V_{SS} level. This can guarantee a Full Reset of the device for the next power-up cycle.

6.4.2 LAYOUT CONSIDERATIONS

When laying out a printed circuit board for use with analog components, care should be taken to reduce noise wherever possible. A bypass capacitor from V_{DD} to ground must be used always with this device and placed as close as possible to the device pin. A bypass capacitor value of 0.1 µF is recommended.

Digital and analog traces should be separated as much as possible on the board, with no traces running underneath the device or the bypass capacitor. Extra precautions should be taken to keep traces with high-frequency signals (such as clock lines) as far as possible from analog traces.

The MCP3021 must be connected entirely to the analog ground place as well as the analog power trace. The pull-up resistors can be placed close to the microcontroller and tied to the digital power or V_{CC}.

Use of an analog ground plane is recommended in order to keep the ground potential the same for all devices on the board. Providing V_{DD} connections to devices in a Star configuration can also reduce noise by eliminating current return paths and associated errors (Figure 6-6). For more information on layout tips when using the MCP3021 or other ADC devices, refer to the Microchip Technology Application Note, "*AN688 Layout Tips for 12-Bit A/D Converter Application*" (DS00688).

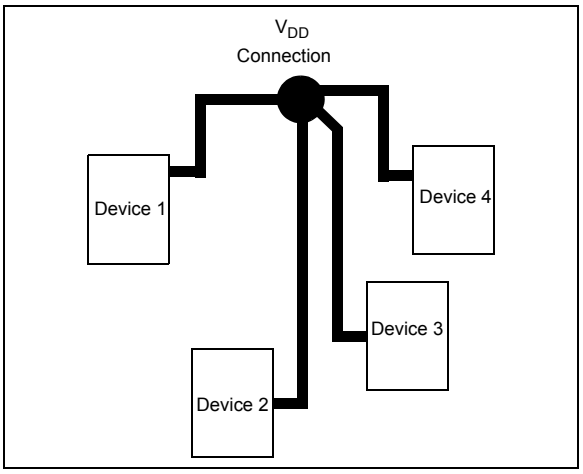

FIGURE 6-6: *V_{DD} traces arranged in a Star configuration in order to reduce errors caused by current return paths.*

© 2003-2017 Microchip Technology Inc.

6.4.3 USING A REFERENCE FOR SUPPLY

The MCP3021 uses V_{DD} as power and also as a reference. In some applications, it may be necessary to use a stable reference to achieve the required accuracy. Figure 6-7 shows an example using the MCP1541 as a 4.096V 2% reference.

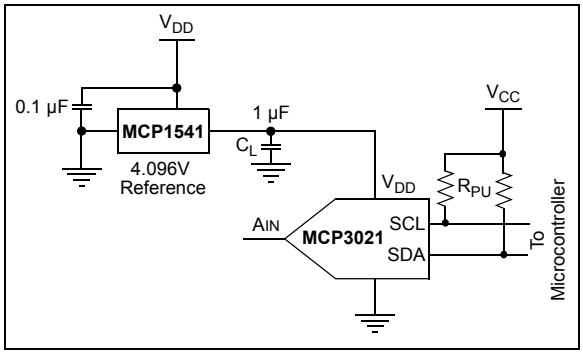

FIGURE 6-7: *Stable Power and Reference Configuration.*

7.0 PACKAGING INFORMATION

7.1 Package Marking Information

5-Pin SOT-23

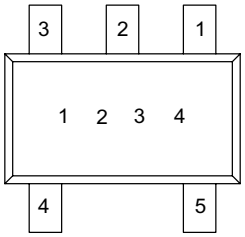

Part Number	Address Option	SOT-23
MCP3021A0T-E/OT	000	GP
MCP3021A1T-E/OT	001	GS
MCP3021A2T-E/OT	010	GK
MCP3021A3T-E/OT	011	GL
MCP3021A4T-E/OT	100	GM
MCP3021A5T-E/OT	101	GJ *
MCP3021A6T-E/OT	110	GQ
MCP3021A7T-E/OT	111	GR

* Default option. Contact Microchip Factory for other address options.

Legend:	XX...X	Customer-specific information
	Y	Year code (last digit of calendar year)
	YY	Year code (last 2 digits of calendar year)
	WW	Week code (week of January 1 is week ‘01’)
	NNN	Alphanumeric traceability code
	e3	Pb-free JEDEC designator for Matte Tin (Sn)
	*	This package is Pb-free. The Pb-free JEDEC designator (e3) can be found on the outer packaging for this package.

Note: In the event the full Microchip part number cannot be marked on one line, it will be carried over to the next line, thus limiting the number of available characters for customer-specific information.

© 2003-2017 Microchip Technology Inc.

5-Lead Plastic Small Outline Transistor (OT) (SOT-23)

Note: For the most current package drawings, please see the Microchip Packaging Specification located at http://www.microchip.com/packaging

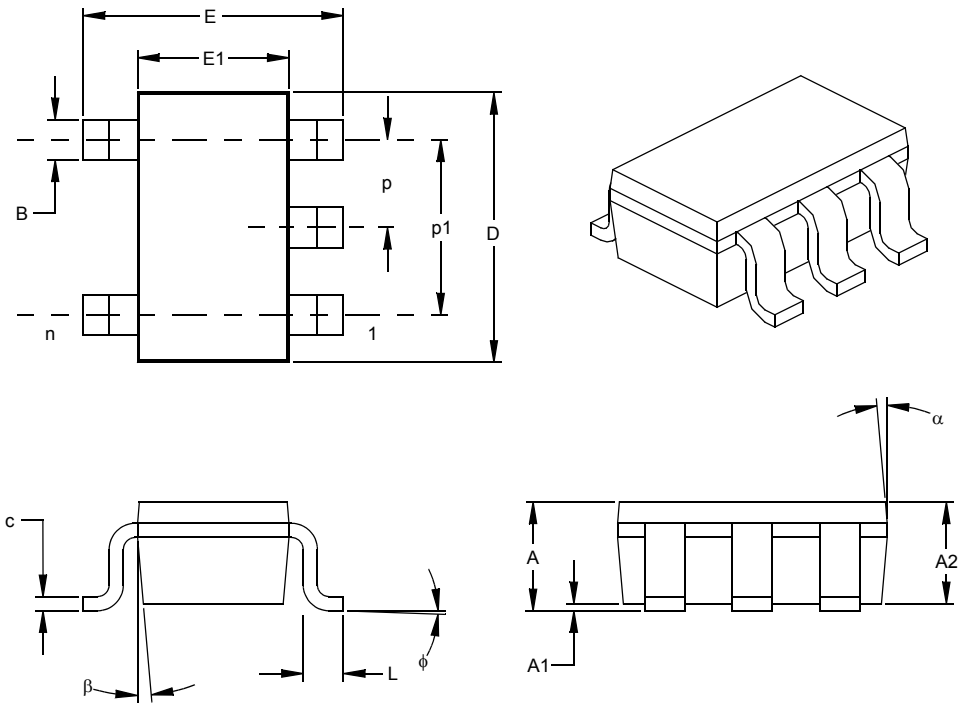

Units		INCHES*			MILLIMETERS		
Dimension Limits		MIN	NOM	MAX	MIN	NOM	MAX
Number of Pins	n		5			5	
Pitch	p		.038			0.95	
Outside lead pitch (basic)	p1		.075			1.90	
Overall Height	A	.035	.046	.057	0.90	1.18	1.45
Molded Package Thickness	A2	.035	.043	.051	0.90	1.10	1.30
Standoff §	A1	.000	.003	.006	0.00	0.08	0.15
Overall Width	E	.102	.110	.118	2.60	2.80	3.00
Molded Package Width	E1	.059	.064	.069	1.50	1.63	1.75
Overall Length	D	.110	.116	.122	2.80	2.95	3.10
Foot Length	L	.014	.018	.022	0.35	0.45	0.55
Foot Angle	ϕ	0	5	10	0	5	10
Lead Thickness	c	.004	.006	.008	0.09	0.15	0.20
Lead Width	B	.014	.017	.020	0.35	0.43	0.50
Mold Draft Angle Top	α	0	5	10	0	5	10
Mold Draft Angle Bottom	β	0	5	10	0	5	10

* Controlling Parameter
§ Significant Characteristic

Notes:
Dimensions D and E1 do not include mold flash or protrusions. Mold flash or protrusions shall not exceed .010” (0.254mm) per side.
JEDEC Equivalent: MO-178
Drawing No. C04-091

NOTES:

© 2003-2017 Microchip Technology Inc.

APPENDIX A: REVISION HISTORY

Revision C (January 2017)

The following is the list of modifications:

- Added a note to **Section 6.4.1 "Powering the MCP3021"**.
- Updated Figure 6-5.
- Fixed **Section 7.1 "Package Marking Information"** format to reflect the correct package marking as "1 2 3 4" instead of "1 10 10 10".

Revision B (January 2013)

- Added a note to each package outline drawing.

Revision A (June 2003)

- Original Release of this Document.

NOTES:

© 2003-2017 Microchip Technology Inc.

PRODUCT IDENTIFICATION SYSTEM

To order or obtain information, e.g., on pricing or delivery, refer to the factory or the listed sales office.

PART NO.	XX	X	/XX
Device	Address Options	Temperature Range	Package

Device: MCP3021T: 10-Bit 2-Wire Serial A/D Converter (Tape and Reel)

Temperature Range: E = -40°C to +125°C

Address Options:

XX		A2	A1	A0
A0	=	0	0	0
A1	=	0	0	1
A2	=	0	1	0
A3	=	0	1	1
A4	=	1	0	0
A5 *	=	1	0	1
A6	=	1	1	0
A7	=	1	1	1

* Default option. Contact Microchip factory for other address options

Package: OT = SOT-23, 5-lead (Tape and Reel)

Examples:

a) MCP3021A0T-E/OT: Extended, A0 Address, Tape and Reel
b) MCP3021A1T-E/OT: Extended, A1 Address, Tape and Reel
c) MCP3021A2T-E/OT: Extended, A2 Address, Tape and Reel
d) MCP3021A3T-E/OT: Extended, A3 Address, Tape and Reel
e) MCP3021A4T-E/OT: Extended, A4 Address, Tape and Reel
f) MCP3021A5T-E/OT: Extended, A5 Address, Tape and Reel
g) MCP3021A6T-E/OT: Extended, A6 Address, Tape and Reel
h) MCP3021A7T-IE/OT: Extended, A7 Address, Tape and Reel

© 2003-2017 Microchip Technology Inc.

NOTES:

© 2003-2017 Microchip Technology Inc.

Note the following details of the code protection feature on Microchip devices:

- Microchip products meet the specification contained in their particular Microchip Data Sheet.
- Microchip believes that its family of products is one of the most secure families of its kind on the market today, when used in the intended manner and under normal conditions.
- There are dishonest and possibly illegal methods used to breach the code protection feature. All of these methods, to our knowledge, require using the Microchip products in a manner outside the operating specifications contained in Microchip's Data Sheets. Most likely, the person doing so is engaged in theft of intellectual property.
- Microchip is willing to work with the customer who is concerned about the integrity of their code.
- Neither Microchip nor any other semiconductor manufacturer can guarantee the security of their code. Code protection does not mean that we are guaranteeing the product as "unbreakable."

Code protection is constantly evolving. We at Microchip are committed to continuously improving the code protection features of our products. Attempts to break Microchip's code protection feature may be a violation of the Digital Millennium Copyright Act. If such acts allow unauthorized access to your software or other copyrighted work, you may have a right to sue for relief under that Act.

Information contained in this publication regarding device applications and the like is provided only for your convenience and may be superseded by updates. It is your responsibility to ensure that your application meets with your specifications. MICROCHIP MAKES NO REPRESENTATIONS OR WARRANTIES OF ANY KIND WHETHER EXPRESS OR IMPLIED, WRITTEN OR ORAL, STATUTORY OR OTHERWISE, RELATED TO THE INFORMATION, INCLUDING BUT NOT LIMITED TO ITS CONDITION, QUALITY, PERFORMANCE, MERCHANTABILITY OR FITNESS FOR PURPOSE**.** Microchip disclaims all liability arising from this information and its use. Use of Microchip devices in life support and/or safety applications is entirely at the buyer's risk, and the buyer agrees to defend, indemnify and hold harmless Microchip from any and all damages, claims, suits, or expenses resulting from such use. No licenses are conveyed, implicitly or otherwise, under any Microchip intellectual property rights unless otherwise stated.

Microchip received ISO/TS-16949:2009 certification for its worldwide headquarters, design and wafer fabrication facilities in Chandler and Tempe, Arizona; Gresham, Oregon and design centers in California and India. The Company's quality system processes and procedures are for its PIC® MCUs and dsPIC® DSCs, KEELOQ® code hopping devices, Serial EEPROMs, microperipherals, nonvolatile memory and analog products. In addition, Microchip's quality system for the design and manufacture of development systems is ISO 9001:2000 certified.

QUALITY MANAGEMENT SYSTEM
CERTIFIED BY DNV
= ISO/TS 16949 =

Trademarks

The Microchip name and logo, the Microchip logo, AnyRate, AVR, AVR logo, AVR Freaks, BeaconThings, BitCloud, CryptoMemory, CryptoRF, dsPIC, FlashFlex, flexPWR, Heldo, JukeBlox, KEELOQ, KEELOQ logo, Kleer, LANCheck, LINK MD, maXStylus, maXTouch, MediaLB, megaAVR, MOST, MOST logo, MPLAB, OptoLyzer, PIC, picoPower, PICSTART, PIC32 logo, Prochip Designer, QTouch, RightTouch, SAM-BA, SpyNIC, SST, SST Logo, SuperFlash, tinyAVR, UNI/O, and XMEGA are registered trademarks of Microchip Technology Incorporated in the U.S.A. and other countries.

ClockWorks, The Embedded Control Solutions Company, EtherSynch, Hyper Speed Control, HyperLight Load, IntelliMOS, mTouch, Precision Edge, and Quiet-Wire are registered trademarks of Microchip Technology Incorporated in the U.S.A.

Adjacent Key Suppression, AKS, Analog-for-the-Digital Age, Any Capacitor, AnyIn, AnyOut, BodyCom, chipKIT, chipKIT logo, CodeGuard, CryptoAuthentication, CryptoCompanion, CryptoController, dsPICDEM, dsPICDEM.net, Dynamic Average Matching, DAM, ECAN, EtherGREEN, In-Circuit Serial Programming, ICSP, Inter-Chip Connectivity, JitterBlocker, KleerNet, KleerNet logo, Mindi, MiWi, motorBench, MPASM, MPF, MPLAB Certified logo, MPLIB, MPLINK, MultiTRAK, NetDetach, Omniscient Code Generation, PICDEM, PICDEM.net, PICkit, PICtail, PureSilicon, QMatrix, RightTouch logo, REAL ICE, Ripple Blocker, SAM-ICE, Serial Quad I/O, SMART-I.S., SQI, SuperSwitcher, SuperSwitcher II, Total Endurance, TSHARC, USBCheck, VariSense, ViewSpan, WiperLock, Wireless DNA, and ZENA are trademarks of Microchip Technology Incorporated in the U.S.A. and other countries.

SQTP is a service mark of Microchip Technology Incorporated in the U.S.A.

Silicon Storage Technology is a registered trademark of Microchip Technology Inc. in other countries.

GestIC is a registered trademark of Microchip Technology Germany II GmbH & Co. KG, a subsidiary of Microchip Technology Inc., in other countries.

All other trademarks mentioned herein are property of their respective companies.

© 2003-2017, Microchip Technology Incorporated, All Rights Reserved.

ISBN: 978-1-5224-1290-8

Worldwide Sales and Service

AMERICAS

Corporate Office
2355 West Chandler Blvd.
Chandler, AZ 85224-6199
Tel: 480-792-7200
Fax: 480-792-7277
Technical Support:
http://www.microchip.com/support
Web Address:
www.microchip.com

Atlanta
Duluth, GA
Tel: 678-957-9614
Fax: 678-957-1455

Austin, TX
Tel: 512-257-3370

Boston
Westborough, MA
Tel: 774-760-0087
Fax: 774-760-0088

Chicago
Itasca, IL
Tel: 630-285-0071
Fax: 630-285-0075

Dallas
Addison, TX
Tel: 972-818-7423
Fax: 972-818-2924

Detroit
Novi, MI
Tel: 248-848-4000

Houston, TX
Tel: 281-894-5983

Indianapolis
Noblesville, IN
Tel: 317-773-8323
Fax: 317-773-5453
Tel: 317-536-2380

Los Angeles
Mission Viejo, CA
Tel: 949-462-9523
Fax: 949-462-9608
Tel: 951-273-7800

Raleigh, NC
Tel: 919-844-7510

New York, NY
Tel: 631-435-6000

San Jose, CA
Tel: 408-735-9110
Tel: 408-436-4270

Canada - Toronto
Tel: 905-695-1980
Fax: 905-695-2078

ASIA/PACIFIC

Asia Pacific Office
Suites 3707-14, 37th Floor
Tower 6, The Gateway
Harbour City, Kowloon

Hong Kong
Tel: 852-2943-5100
Fax: 852-2401-3431

Australia - Sydney
Tel: 61-2-9868-6733
Fax: 61-2-9868-6755

China - Beijing
Tel: 86-10-8569-7000
Fax: 86-10-8528-2104

China - Chengdu
Tel: 86-28-8665-5511
Fax: 86-28-8665-7889

China - Chongqing
Tel: 86-23-8980-9588
Fax: 86-23-8980-9500

China - Dongguan
Tel: 86-769-8702-9880

China - Guangzhou
Tel: 86-20-8755-8029

China - Hangzhou
Tel: 86-571-8792-8115
Fax: 86-571-8792-8116

China - Hong Kong SAR
Tel: 852-2943-5100
Fax: 852-2401-3431

China - Nanjing
Tel: 86-25-8473-2460
Fax: 86-25-8473-2470

China - Qingdao
Tel: 86-532-8502-7355
Fax: 86-532-8502-7205

China - Shanghai
Tel: 86-21-3326-8000
Fax: 86-21-3326-8021

China - Shenyang
Tel: 86-24-2334-2829
Fax: 86-24-2334-2393

China - Shenzhen
Tel: 86-755-8864-2200
Fax: 86-755-8203-1760

China - Wuhan
Tel: 86-27-5980-5300
Fax: 86-27-5980-5118

China - Xian
Tel: 86-29-8833-7252
Fax: 86-29-8833-7256

ASIA/PACIFIC

China - Xiamen
Tel: 86-592-2388138
Fax: 86-592-2388130

China - Zhuhai
Tel: 86-756-3210040
Fax: 86-756-3210049

India - Bangalore
Tel: 91-80-3090-4444
Fax: 91-80-3090-4123

India - New Delhi
Tel: 91-11-4160-8631
Fax: 91-11-4160-8632

India - Pune
Tel: 91-20-3019-1500

Japan - Osaka
Tel: 81-6-6152-7160
Fax: 81-6-6152-9310

Japan - Tokyo
Tel: 81-3-6880- 3770
Fax: 81-3-6880-3771

Korea - Daegu
Tel: 82-53-744-4301
Fax: 82-53-744-4302

Korea - Seoul
Tel: 82-2-554-7200
Fax: 82-2-558-5932 or
82-2-558-5934

Malaysia - Kuala Lumpur
Tel: 60-3-6201-9857
Fax: 60-3-6201-9859

Malaysia - Penang
Tel: 60-4-227-8870
Fax: 60-4-227-4068

Philippines - Manila
Tel: 63-2-634-9065
Fax: 63-2-634-9069

Singapore
Tel: 65-6334-8870
Fax: 65-6334-8850

Taiwan - Hsin Chu
Tel: 886-3-5778-366
Fax: 886-3-5770-955

Taiwan - Kaohsiung
Tel: 886-7-213-7830

Taiwan - Taipei
Tel: 886-2-2508-8600
Fax: 886-2-2508-0102

Thailand - Bangkok
Tel: 66-2-694-1351
Fax: 66-2-694-1350

EUROPE

Austria - Wels
Tel: 43-7242-2244-39
Fax: 43-7242-2244-393

Denmark - Copenhagen
Tel: 45-4450-2828
Fax: 45-4485-2829

Finland - Espoo
Tel: 358-9-4520-820

France - Paris
Tel: 33-1-69-53-63-20
Fax: 33-1-69-30-90-79

France - Saint Cloud
Tel: 33-1-30-60-70-00

Germany - Garching
Tel: 49-8931-9700

Germany - Haan
Tel: 49-2129-3766400

Germany - Heilbronn
Tel: 49-7131-67-3636

Germany - Karlsruhe
Tel: 49-721-625370

Germany - Munich
Tel: 49-89-627-144-0
Fax: 49-89-627-144-44

Germany - Rosenheim
Tel: 49-8031-354-560

Israel - Ra'anana
Tel: 972-9-744-7705

Italy - Milan
Tel: 39-0331-742611
Fax: 39-0331-466781

Italy - Padova
Tel: 39-049-7625286

Netherlands - Drunen
Tel: 31-416-690399
Fax: 31-416-690340

Norway - Trondheim
Tel: 47-7289-7561

Poland - Warsaw
Tel: 48-22-3325737

Romania - Bucharest
Tel: 40-21-407-87-50

Spain - Madrid
Tel: 34-91-708-08-90
Fax: 34-91-708-08-91

Sweden - Gothenberg
Tel: 46-31-704-60-40

Sweden - Stockholm
Tel: 46-8-5090-4654

UK - Wokingham
Tel: 44-118-921-5800
Fax: 44-118-921-5820

© 2003-2017 Microchip Technology Inc.